Polo Estate 1998 ➤

4LV injection / ignition system

Engine ID	APE	AUA							

Edition 12.1999

Protected by copyright. Copying for private or commercial purposes, in part or in whole, is not permitted unless authorised by Volkswagen AG. Volkswagen AG does not guarantee or accept any liability with respect to the correctness of information in this document. Copyright by Volkswagen AG.

satelettronica

List of Workshop Manual Repair GroupsList of Workshop Manual Repair GroupsList of Workshop Manual Repair Groups

Polo Estate 1998 ➤

4LV injection / ignition system

Repair Group

01 - Self-diagnosis

24 - Mixture preparation, Injection

28 - Ignition system

Protected by copyright. Copying for private or commercial purposes, in part or in whole, is not permitted unless authorised by Volkswagen AG. Volkswagen AG does not guarantee or accept any liability with respect to the correctness of information in this document. Copyright by Volkswagen AG.

satelettronica

Technical information should always be available to the foremen and mechanics, because their careful and constant adherence to the instructions is essential to ensure vehicle road-worthiness and safety. In addition, the normal basic safety precautions for working on motor vehicles must, as a matter of course, be observed.

All rights reserved.
No reproduction without prior agreement from publisher.

Copyright © 2011 Volkswagen AG, Wolfsburg

00056407720

Contents

01 - Self-diagnosis 1
1 **General to self-diagnosis** 1
1.1 General to self-diagnosis 1
1.2 Features of self-diagnosis 1
1.3 Technical data of self-diagnosis 1
1.4 Significance of EPC warning lamp (fault lamp for electronic accelerator) in dash panel insert 2
1.5 Significance of exhaust emissions warning lamp 3
1.6 Connecting fault reader 4
2 **Fault memory** 7
2.1 Fault memory 7
2.2 Interrogating and erasing fault memory 7
3 **Fault table: from V.A.G code 16486 / SAE P0 codes** 9
3.1 Fault table: from V.A.G code 16486 / SAE P0 codes 9
4 **Fault table: from V.A.G code 17510 / SAE P1 codes** 13
4.1 Fault table: from V.A.G code 17510 / SAE P1 codes 13
5 **Final control diagnosis** 21
5.1 Final control diagnosis 21
5.2 Performing final control diagnosis 21
6 **Readiness code** 28
6.1 Readiness code 28
6.2 Reading readiness code 28
6.3 Generating readiness code 29
7 **Measured value blocks** 33
7.1 Measured value blocks 33
7.2 Safety precautions 33
7.3 Read measured value block 33
8 **Evaluating measured value blocks, display groups 0...6 -Basic functions** 35
8.1 Evaluating measured value blocks, display groups 0...6 -Basic functions 35
9 **Evaluating measured value blocks, display groups 10...29 -Ignition-** 39
9.1 Evaluating measured value blocks, display groups 10...29 -Ignition- 39
10 **Evaluating measured value blocks, display groups 30...49 -Lambda regulation-** 42
10.1 Evaluating measured value blocks, display groups 30...49 -Lambda regulation- 42
11 **Evaluating measured value blocks, display groups 50...69 -Speed regulation-** 48
11.1 Evaluating measured value blocks, display groups 50...69 -Speed regulation- 48
12 **Evaluating measured value blocks, display groups 70...75 -Exhaust gas recirculation-** 51
12.1 Evaluating measured value blocks, display groups 70...75 -Exhaust gas recirculation- 51
13 **Evaluating measured value blocks, display group 100 -Readiness code-** 52
13.1 Evaluating measured value blocks, display group 100 -Readiness code- 52
14 **Evaluating measured value blocks, display groups 120...129 -Communication-** 52
14.1 Evaluating measured value blocks, display groups 120...129 -Communication- 52

24 - Mixture preparation, Injection 54
1 **Servicing injection system** 54
1.1 Servicing injection system 54
1.2 Fitting locations overview 54
1.3 General notes on injection 58
1.4 Removing and installing parts of the injection system 59
1.5 Dismantling and assembling intake manifold 69
1.6 Dismantling and assembling fuel rail with injectors 72
1.7 Dismantling and assembling air cleaner 75

Protected by copyright. Copying for private or commercial purposes, in part or in whole, is not permitted unless authorised by Volkswagen AG. Volkswagen AG does not guarantee or accept any liability with respect to the correctness of information in this document. Copyright by Volkswagen AG.

satelettronica

1.8 Safety precautions 78
1.9 Rules for cleanliness 79
1.10 Technical data 80

2 Checking components 80
2.1 Checking components 80
2.2 Checking Lambda probe heating for Lambda probe before catalyst 80
2.3 Checking Lambda probe heating for Lambda probe after catalyst 83
2.4 Checking throttle valve control part 85
2.5 Checking intake manifold pressure sender 87
2.6 Checking intake air temperature sender 90
2.7 Checking coolant temperature sender 94
2.8 Checking engine speed sender 98
2.9 Checking injectors 100
2.10 Checking fuel pressure regulator and holding pressure 107
2.11 Checking intake air system for leaks (unmetered air) 110
2.12 Checking intake air preheating 111

3 Checking functions 112
3.1 Checking functions 112
3.2 Idling check 112
3.3 Adapting idling speed 114
3.4 Checking Lambda probe and Lambda regulation before catalyst 115
3.5 Checking Lambda probe and Lambda regulation after catalyst 118
3.6 Checking engine operating mode 122

4 Engine control unit 123
4.1 Engine control unit 123
4.2 Checking control unit voltage supply 123
4.3 Procedure after voltage supply open circuit 125
4.4 Replacing engine control unit 126
4.5 Coding engine control unit 127
4.6 Coding variants of engine control unit 128
4.7 Adapting engine control unit to throttle valve control part 128
4.8 Adapting engine control unit to electronic immobilizer 130

5 Checking additional signals 131
5.1 Checking additional signals 131
5.2 Checking speed signal 131
5.3 Checking signal from/to air conditioning system 133
5.4 Checking signal from brake light switch and brake pedal switch 134
5.5 Checking driving range signal 136
5.6 Checking rpm signal 137
5.7 Checking data bus 138

28 - Ignition system 140

1 Servicing ignition system 140
1.1 Servicing ignition system 140
1.2 General notes on ignition system 140
1.3 Removing and installing parts of the ignition system 141
1.4 Safety precautions 143
1.5 Test data, spark plugs 144
1.6 Checking Hall sender 145
1.7 Checking ignition transformer 147
1.8 Checking knock sensor 150
1.9 Check misfiring recognition 152

Copyright by Volkswagen AG. Volkswagen AG does not guarantee or accept any liability with respect to the correctness of information in this document. Copyright by Volkswagen AG.
Protected by copyright. Copying or passing on to third parties not permitted without the express consent of Volkswagen AG.
www.vwtechnicalservicesinformation.com
satelettronica

01 - Self-diagnosis

1 - General to self-diagnosis

1.1 - General to self-diagnosis

Note:

The self-diagnosis monitors only a part of the injection and ignition system. For fault finding the binder "Fault finding engine" must also be used in every case.

1.2 - Features of self-diagnosis

The 4LV injection and ignition system control unit (J537) is equipped with a fault memory.

If faults occur in the sensors and components being monitored, they will be stored in the fault memory together with an indication of the type of fault.

After evaluating the information, the engine control unit decides between 127 differing fault codes => Fault table Page 13 and stores these faults until the contents of the fault memory is erased.

Faults which only occur sporadically will have the addendum "sporadic fault" on the print out. These faults will be indicated on the display by the addendum "/SP". The cause of sporadic faults can be e.g. a loose contact or a brief open circuit. If a sporadic fault does not occur again within 40 warm-up phases (engine start below 50° C coolant temperature - switched off above 72° C), it will be erased from the fault memory.

The faults stored can be read-out with the fault reader V.A.G 1551 or the vehicle system tester V.A.G 1552 => Page 7 , interrogating and erasing fault memory.

The fault memory must be erased after the faults have been rectified => Page 7 .

Note:

General information for self-diagnosis can be found in the instruction manuals for the fault reader V.A.G 1551, vehicle system tester V.A.G 1552 or the new tester VAS 5051.

1.3 - Technical data of self-diagnosis

Control unit identification

The control unit version is displayed when the fault reader V.A.G 1551, the vehicle system tester V.A.G 1552 or the new tester VAS 5051 is connected and engine electronics control unit selected => Page 4 .

Technical data

Engine code	APE	AUA
System designation	MARELLI 4LV	MARELLI 4LV
Exhaust emissions fulfil	D4 standard	EU4 standard
Self-diagnosis	yes	yes
Final control diagnosis	yes	yes
Operating mode of data transfer to V.A.G 1551/1552	Rapid data transfer	Rapid data transfer

Protected by copyright. Copying for private or commercial purposes, in part or in whole, is not permitted unless authorised by Volkswagen AG. Volkswagen AG does not guarantee or accept any liability with respect to the correctness of information in this document. Copyright by Volkswagen AG.
satelettronica

Control unit coding	V.A.G 1551/1552	V.A.G 1551/1552
Fault memory	Non-volatile memory1)	Non-volatile memory1)
Memory for learnt values	Volatile memory2)	Volatile memory2)
Lambda regulation	yes	yes
Knock control	1 knock sensor	1 knock sensor
Variable intake manifold	no	no
Variable valve timing	no	no
Charge pressure control	no	no

1) Independent of voltage supply.

2) Values are erased when voltage supply is interrupted.

Selectable functions when using fault reader V.A.G 1551 or V.A.G 1552

Note:

The prerequisites for selecting the desired functions can be determined from the following table.

Function		Prerequisite		
Functions on fault reader V.A.G 1551 or on system tester V.A.G 1552		Engine stopped, ignition switched on	Engine running at idling speed	Vehicle being driven
01	Interrogate control unit version	yes	yes	yes
02	Interrogate fault memory	yes1)	yes	yes
03	Final control diagnosis	yes	no	no
04	Basic setting2)	yes	no	no
05	Erase fault memory	yes	yes	yes
06	End output	yes	yes	yes
08	Read measured value block	yes	yes	yes

1) Only carry out with ignition switched on, when engine does not start.

2) Must be carried out after the following: Replacing engine control unit, throttle valve control part, exhaust recirculation valve or engine, or disconnecting battery.

The air conditioning and the ACF system are automatically shut off in mode 04.

1.4 - Significance of EPC warning lamp (fault lamp for electronic accelerator) in dash panel insert

"EPC" is the abbreviation for Electronic Power Control.

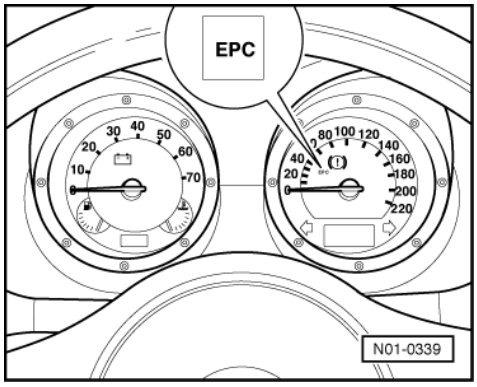

satelettronica

-> Location of EPC warning lamp

If faults are recognised in electronic power control system when the engine is running, the combi-instrument will switch on the EPC lamp. (These faults are identified in the fault table.) Simultaneously an entry is made in the engine control unit fault memory.

Functional check:

- Switch on ignition:
  the EPC warning lamp must light-up.

If the EPC warning lamp does not light-up with ignition switched on:

- Check combi-instrument and EPC warning lamp as follows:

=> Electrical system self-diagnosis; Repair group 01

If the EPC warning lamp lights up with ignition switched on:

- Start engine and run at idling speed:
  The EPC warning lamp must go out after a few seconds.

If the EPC warning lamp does not go out:

- Interrogate fault memory, if necessary, repair any faults and then erase fault memory => Page 7 , interrogating and erasing fault memory.

1.5 - Significance of exhaust emissions warning lamp

Engine code: AUA

If the engine control unit detects a fault this is indicated by switching the exhaust emissions warning lamp on.

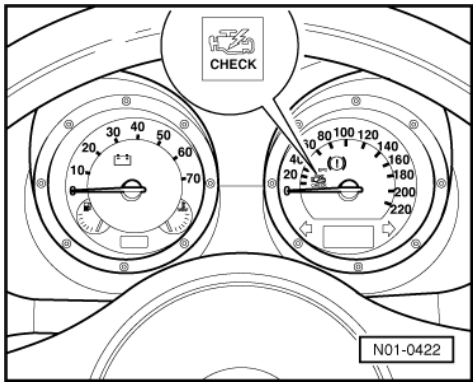

-> Location of exhaust emissions warning lamp

Note:

The exhaust emissions warning lamp can switch on in the continuous or flashing mode. Always interrogate fault memory => Page 7 .

- Flashing mode: There is a fault present which can damage the catalyst when continuing to drive at this power output. If this occurs, continue driving only at reduced output.

Protected by copyright. Copying for private or commercial purposes, in part or in whole, is not permitted unless authorised by Volkswagen AG. Volkswagen AG does not guarantee or accept any liability with respect to the correctness of information in this document. Copyright by Volkswagen AG.
satelettronica

Protected by copyright. Copying for private or commercial purposes, in part or in whole, is not permitted unless authorised by Volkswagen AG. Volkswagen AG does not guarantee or accept any liability with respect to the correctness of information in this document. Copyright by Volkswagen AG.

- Continuous mode: There is a fault present which causes the emissions to deteriorate. Interrogate engine or gearbox control unit in this case.

- Interrogate the fault memory if the customer has a complaint or there is a driving characteristic problem and the exhaust gas warning lamp does not light up, this is because faults can be stored which will not switch the exhaust gas warning lamp on immediately.

Functional check:
- Switch on ignition:
  the exhaust emissions warning lamp must light-up.

If the exhaust emissions warning lamp does not light-up with ignition switched on:
- Check combi-instrument and exhaust emissions warning lamp as follows:

=> Electrical system self-diagnosis; Repair group 01
If the exhaust emissions warning lamp lights-up with ignition switched on, continue check as follows:
- Start engine and run at idling speed:
  The exhaust emissions warning lamp must go out after a few seconds.

If the exhaust emissions warning lamp does not go out:
- Interrogate fault memory, if necessary, repair any faults and then erase fault memory => Page 7, interrogating and erasing fault memory.

1.6 - Connecting fault reader

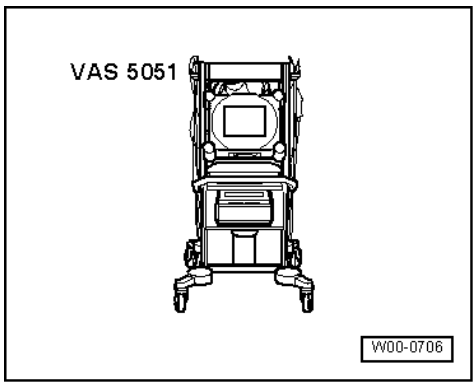

All functions which could previously be performed with V.A.G 1551/1552 can also be performed with the new tester VAS 5051 in the operating mode vehicle self-diagnosis.
=> Operating instructions for Vehicle Diagnosis, Testing and Information System VAS 5051.
Special tools, workshop equipment, testers, measuring instruments and auxiliary items required
- -> VAS 5051 Vehicle Diagnosis, Testing and Information System
- Diagnosis cable VAS 5051/1 or VAS 5051/3

Test conditions:

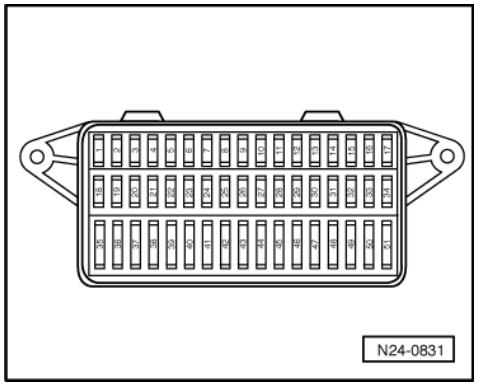

satelettronica

- -> Fuses No. 1, 3, 11, 15, 23, 30, 31, 32, 34, 36, 37, 39 and 40 must be OK.
- The battery voltage must be at least 11.5 V.
- Earth connection between engine (at bell housing) and body (under battery) OK.
- Earth connection in plenum chamber OK.

Connecting VAS 5051

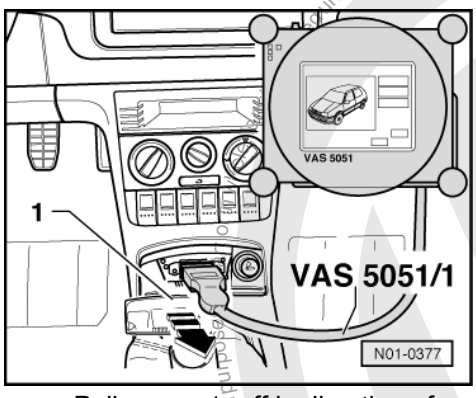

- -> Pull cover -1- off in direction of arrow.
- Fit connector from diagnosis cable VAS 5051/1 or VAS 5051/3 to diagnosis connection.
- Depending on the desired function either switch ignition on
  or
  start engine and run at idling speed. Selectable functions => Page 2 .

Selecting operating mode:

- Press button on display for "Vehicle self-diagnosis".

Selecting vehicle system:

- Press button "01 - Engine electronics" on display.

The control unit identification and coding are indicated on the display.

If the coding differs from the vehicle version:

- Check control unit coding and, if necessary, code engine control unit => Page 127

Selecting diagnosis function:

All diagnostic functions available are indicated on the display.

- Press button on display for desired function.

Notes:

The display zones in functions 04 - Basic setting or 08 - Read measured value block are shown from top to bottom.

The following test sequences are for fault reader V.A.G 1551.

Connecting V.A.G 1551

Special tools, workshop equipment, testers, measuring instruments and auxiliary items required

- V.A.G 1551 Fault reader
- V.A.G 1551/3 Cable

Copyright by Volkswagen AG. Volkswagen AG does not guarantee or accept any liability with respect to the correctness of information in this document. Copyright by Volkswagen AG. Protected by copyright. Copying for private or commercial purposes, in part or in whole, is not permitted unless authorised by Volkswagen AG.
satelettronica

Note:

The vehicle system tester V.A.G 1552 can be used instead of the fault reader V.A.G 1551, however a print-out is not possible.

Work sequence

- Connect fault reader V.A.G 1551 using cable V.A.G 1551/3.
- Depending on the desired function either switch ignition on
  or
  start engine and run at idling speed. Selectable functions => Page 2 .

Notes:

- If the display remains blank, check voltage supply for diagnostic connection according to fault finding programme:

=> Current flow diagrams, Electrical fault finding and Fitting locations

- If the display does not indicate as described in the work sequence:

=> Fault reader operating instructions

- If due to an input fault "Fault in the data transfer!" is displayed, pull wire off fault reader, reconnect and repeat work step.

-> Indicated on display:

```
V.A.G - SELF DIAGNOSIS     HELP
     1 - Rapid data transfer*
     2 - Flash code output*
```

* Appears alternately

- Operate fault reader taking into account the information on the display:
- Press key 1 for "Rapid data transfer".
- Press keys 0 and 1 for address word "Engine electronics" and confirm entry with Q key.

-> The control unit identification and the coding appear on the display, e.g.:

```
6K090634C     MARELLI 4LV     2615
Coding 00011     WSC XXXXX
```

- 6K090634C = Part No. of the control unit (for latest control unit version see parts catalogue)
- MARELLI 4LV = System designation and version
- 2615 = Program level number
- Coding 00011 = Control unit coding
  Coding variants => Page 128
- WSC xxxxx = Workshop code from V.A.G 1551, of the workshop who carried out the last coding. (If the factory coding has not been changed, WSC 00000 appears)

Note:

Replace control unit if the control version displayed does not correspond to the vehicle

=> Page 126 .

An incorrectly coded engine control unit leads to:

- Engine running faults (gear change jerks, load change jerks, etc.)
- Increased fuel consumption
- Increased exhaust gas emissions
- Faults stored in fault memory which are not actually present
- Functions will not be performed (Lambda regulation, activation of the activated charcoal filter system, etc.).
- Reduced gearbox life

Protected by copyright. Copying for private or commercial purposes, in part or in whole, is not permitted unless authorised by Volkswagen AG. Volkswagen AG does not guarantee or accept any liability with respect to the correctness of information in this document. Copyright by Volkswagen AG.
satelettronica

If the coding differs from the vehicle version, then:

- Checking control unit coding => Page 127 ,
  coding engine control unit
- Press ⇒key.

-> Indicated on display:

```
Rapid data transfer      HELP
Select function XXX
```

- Further measures see repair procedures.

2 - Fault memory

2.1 - Fault memory

2.2 - Interrogating and erasing fault memory

Special tools, workshop equipment, testers, measuring instruments and auxiliary items required

- Fault reader V.A.G 1551 or vehicle system tester V.A.G 1552 with cable V.A.G 1551/3A

Work sequence

Note:

All functions which could previously be performed with V.A.G 1551/1552 can also be performed with the new tester VAS 5051.

- Connect fault reader V.A.G 1551 (V.A.G 1552). Start engine and select "Address word" 01 of engine control unit. When doing this the engine must be running at idling speed.
  (Connecting fault reader and selecting engine control unit => Page 4 .)

Only when engine does not start:

- Operate starter for approx. 6 seconds and then do not switch off the ignition.

- Switch on fault reader printer with the print key. The warning lamp in key must light up.

-> Indicated on display:

```
Rapid data transfer      HELP
Select function XX
```

- Operate fault reader taking into account the information on the display:
- Press keys 0 and 2 for function "Interrogate fault memory" and confirm entry with Q key.

-> The number of faults stored or "No fault recognised!" will be shown on the display.

```
X Faults recognised!
```

If no fault is stored:

- Press ⇒key.

If one or more faults are stored:

Copyright. Copyright by Volkswagen AG. Volkswagen AG does not guarantee or accept any liability with respect to the correctness of information in this document. Copyright by Volkswagen AG. Copy for private or commercial purposes, in part or in whole, is not permitted unless authorised by Volkswagen AG.
satelettronica

The stored faults will be displayed and printed out one after the other.

-> After the stored faults have been printed out, the display will show:

```
Rapid data transfer      HELP
Select function XX
```

- Press keys 0 and 5 for the function "Erase fault memory" and confirm entry with Q key.

-> Indicated on display:

```
Rapid data transfer
Fault memory is erased!
```

Note:

If the ignition is switched off between "Interrogate fault memory" and "Erase fault memory" the fault memory will not be erased.

- Press ⇒key.

-> Indicated on display:

```
Rapid data transfer      HELP
Select function XX
```

- Press keys 0 and 6 for the function "End output" and confirm entry with the Q key.

-> Indicated on display:

```
Rapid data transfer      HELP
Enter address word XX
```

- Switch off ignition.
- Rectify faults printed out using fault table:
  SAE P0 codes=> Page 13

Automatic test sequence

During test and assembly work faults can be recognised from other control units like e.g. plug disconnected. Therefore, on completion, the fault memories of all control units must be interrogated and erased. To do this:

- Press key 0 twice for address word "Automatic test sequence" and confirm entry with Q key. The V.A.G 1551 transmits all known address words one after the other.

When a control unit answers with its identification the number of stored faults appears on the display or "No fault recognised".

Any system faults that are stored will be displayed one after the other and printed out. The V.A.G 1551 will then transmit the next address word.

-> The automatic test sequence has ended when following is indicated on display:

```
Rapid data transfer      HELP
Enter address word XX
```

- Erase all fault memories and then carry out a road test.

  During the road test the following operating conditions must be fulfilled:
  - The coolant temperature must exceed 80 °C .
  - When the temperature is reached, the operating conditions
    Idling
    Part throttle
    Full throttle
    Overrun
    Enrichment
    must be attained several times.

Volkswagen AG. Volkswagen AG does not guarantee or accept any liability with respect to the correctness of information in this document. Copyright by Volkswagen AG. Protected by copyright. Copying for private or commercial purposes, in part or in whole, is not permitted unless authorised by Volkswagen AG.

satelettronica

- At full throttle the speed must exceed 3500 rpm.

- Again interrogate the fault memories of all control units using the "automatic test sequence".

If no fault is stored:

- Press the ⇒key.

-> Indicated on display:

```
Rapid data transfer      HELP
Select function XX
```

- Press keys 0 and 6 for the function "End output" and confirm entry with the Q key.

-> Indicated on display:

```
Rapid data transfer      HELP
Enter address word XX
```

- Switch off ignition.

Note:

If the self-diagnosis has not detected a fault, use the appropriate fault table in "Fault finding engine" binder for further fault finding.

3 - Fault table: from V.A.G code 16486 / SAE P0 codes

3.1 - Fault table: from V.A.G code 16486 / SAE P0 codes

Notes:

- The fault code overview is listed according to SAE or V.A.G code.
- Electronic accelerator "EPC" relevant faults are indicated additionally by the electronic accelerator warning lamp ("EPC warning lamp") in dash panel insert.
- Explanation of the fault types (e.g. "open circuit/short circuit to earth"):

=> Fault reader operating instructions

- If components are indicated as faulty:
  First check the wiring and connectors to these components as well as the system earth connections according to current flow diagram. This is particularly relevant if faults are output as "occurring sporadically" (SP).
- Erase fault memory after rectifying fault =>Page 7 .

V.A.G 1551 print out, e.g.:

16497 P0113 035

Intake air temperature sender -G42

Signal too large

Sporadic fault

Explanation:

- 16497 = Fault code
- P0113 = Additional fault code (only for USA at present and disregard)
- 035 = Fault type as a number
- Intake air temperature sender -G42 = Faulty current path or incorrect location
- Signal too large = Fault type as text

Copyright by Volkswagen AG. Volkswagen AG does not guarantee or accept any liability with respect to the correctness of information in this document. Copyright by Volkswagen AG. Reproduced by copyright. Copyright by Volkswagen AG. Not permitted unless authorised for commercial purposes, in part or in whole.
satelettronica

- Sporadic faults = Faults that are not always present e.g. loose contact

Fault code		Fault text	Fault elimination
SAE	V.A.G		
P0106	16490	Intake manifold pressure/air pressure => -G71/-F96implausible signal	- Check intake manifold pressure sender =>Page 87
P0107	16491	Intake manifold pressure/air pressure => -G71/-F96signal too low	
P0108	16492	Intake manifold pressure/air pressure => -G71/-F96signal too high	
P0112	16496	Intake air temperature sender -G42 signal too high	- Check intake air temperature sender => Page 90
P0113	16497	Intake air temperature sender -G42 signal too high	
P0116	16500	Coolant temperature sender -G62 implausible signal	- Check coolant temperature sender => Page 94 - Check thermostat: => Repair group 19; Removing and installing parts of cooling system; Parts of cooling system, engine-side Parts of cooling system, engine-side
P0117	16501	Coolant temperature sender -G62 signal too low	
P0118	16502	Coolant temperature sender -G62 signal too high	

Fault code		Fault text	Fault elimination
SAE	V.A.G		
P0130	16514	Bank 1 probe 1 electrical fault in current circuit	- Check Lambda probe and Lambda regulation before catalyst => Page 115
P0131	16515	Bank 1 probe 1 voltage too low	- Check Lambda probe heating before catalyst => Page 80
P0132	16516	Bank 1 probe 1 voltage too high	
P0134	16518	Bank 1 probe 1 no activity	
P0135	16519	Bank 1 probe 1 heating current circuit electrical fault	
P0136	16520	Bank 1 probe 2 electrical fault in current circuit	- Check Lambda probe and Lambda regulation after catalyst => Page 118 - Check Lambda probe heating after catalyst => Page 83
P0137	16521	Bank 1 probe 2 voltage too low	
P0138	16522	Bank 1 probe 2 voltage too high	
P0140	16524	Bank 1 probe 2 no activity	
P0141	16525	Bank 1 probe 2 heating current circuit electrical fault	

Fault code		Fault text	Fault elimination
SAE	V.A.G		
P0170	16554	Bank 1, fuel measuring system faulty	- Check fuel pressure regulator and holding pressure => Page 107
			- Check injectors =>Page 100
			- Check fuel pump: => Repair group 20; Removing and installing parts of fuel system; Check fuel pump Check fuel pump

Protected by copyright. Copyright by Volkswagen AG. Volkswagen AG does not guarantee or accept any liability with respect to the correctness of information in this document. Copyright by Volkswagen AG. Protected by copyright. Copyright by Volkswagen AG. Volkswagen AG does not guarantee or accept any liability with respect to the correctness of information in this document. Copyright by Volkswagen AG. Protected by copyright. Copyright by Volkswagen AG. Volkswagen AG does not guarantee or accept any liability with respect to the correctness of information in this document. Copyright by Volkswagen AG. Protected by copyright. Copyright by Volkswagen AG. Volkswagen AG does not guarantee or accept any liability with respect to the correctness of information in this document. Copyright by Volkswagen AG. Protected by copyright. Copyright by Volkswagen AG. Volkswagen AG does not guarantee or accept any liability with respect to the correctness of information in this document. Copyright by Volkswagen AG. Protected by copyright. Copyright by Volkswagen AG. Volkswagen AG does not guarantee or accept any liability with respect to the correctness of information in this document. Copyright by Volkswagen AG.

satelettronica

			- Check intake system for leaks => Page 110
			- Check vacuum pipes for leaks

Fault code		Fault text	Fault elimination
SAE	V.A.G		
P0171	16555	Bank 1, fuel measuring system, system too lean	- Check fuel pressure regulator and holding pressure =>Page 107
			- Check injectors =>Page 100
			- Check fuel pump: => Repair group 20; Removing and installing parts of fuel system; Check fuel pump Check fuel pump
			- Check intake system for leaks => Page 110
			- Check vacuum pipes for leaks

Fault code		Fault text	Fault elimination
SAE	V.A.G		
P0172	16556	Bank 1, fuel measuring system, system too rich	- Check fuel pressure regulator and holding pressure => Page 107
			- Check injectors =>Page 100
			- Check tank venting valve => Page 21 , final control diagnosis
			- Check Lambda probe and Lambda regulation before catalyst => Page 115
			- Check Lambda probe and Lambda regulation after catalyst => Page 118

Fault code		Fault text	Fault elimination
SAE	V.A.G		
P0300	16684	Misfiring recognised	- Check injectors=>Page 100
P0301	16685	Cyl. 1 misfiring recognised	- Removing and installing parts of the ignition system => Page 141
P0302	16686	Cyl. 2 misfiring recognised	- Check ignition transformer => Page 147
P0303	16687	Cyl. 3 misfiring recognised	- Check misfiring detection => Page 152
P0304	16688	Cyl. 4 misfiring recognised	

Fault code		Fault text	Fault elimination
SAE	V.A.G		
P0321	16705	Engine speed sender -G28 implausible signal	- Check engine speed sender =>Page 98
P0322	16706	Engine speed sender -G28 no signal	
P0325	16709	Knock sensor 1 -G61 fault in electrical circuit	- Check knock sensors => Page 150
P0326	16710	Knock sensor 1 -G61 implausible signal	
P0327	16711	Knock sensor 1 -G61 signal too low	- Check knock sensor => Page 150

Copyright by Volkswagen AG. Volkswagen AG does not guarantee or accept any liability with respect to the correctness of information in this document. Copyright by Volkswagen AG. Protected by copyright. Copying, processing, distribution or other use is not permitted unless authorised by Volkswagen AG.
satelettronica

P0328	16712	Knock sensor 1 -G61 signal too high	

Fault code		Fault text	Fault elimination
SAE	V.A.G		
P0341	16725	Camshaft position sensor Sensor -G40, implausible signal	- Check Hall sender =>Page 145
P0342	16726	Camshaft pos. sensor, =>sender -G40 signal too low	
P0343	16727	Camshaft pos. sensor, =>sender -G40 signal too high	
P0401	16785	Exhaust gas recirculation system flow rate too small	- Check EGR valve (N18): => Page 21 , Final control diagnosis, Basic setting (measured value block 75)
P0402	16786	Exhaust gas recirculation system flow rate too high	

Fault code		Fault text	Fault elimination
SAE	V.A.G		
P0420	16804	Bank1, Catalyst system, Efficiency too low	- Check Lambda probe and Lambda regulation before catalyst => Page 115
			- Check exhaust system for leaks: => Repair group 26; Removing and installing parts of exhaust system
P0441	16825	Tank breathing system, Flow rate faulty	- Check hoses and connecting pipes from fuel tank to throttle control part: => Repair group 20; Activated charcoal filter system; Checking activated charcoal filter system for leaks Checking activated charcoal filter system for leaks
P0461	16845	Fuel status signal, implausible signal	- Check fuel gauge signal sender => Current flow diagrams, Electrical fault finding and Fitting locations binder

Fault code		Fault text	Fault elimination
SAE	V.A.G		
P0501	16885	Vehicle speed signal implausible	- Check speed signal => Page 131
P0506	16890	Idling speed control, Revs below specification	- Check idling speed control => Page 112 , Idling check
P0507	16891	Idling speed control, Revs above specification	
P0532	16916	A/C pressure sensor -G65 signal too low	- Check high pressure sender -G65 => Heating, air conditioning; => Repair group 87
P0533	16917	A/C pressure sensor -G65 signal too high	
P0560	16944	Voltage supply signal implausible	- Check voltage supply => Page 123
P0562	16946	Voltage supply too low	- Procedure after interrupting voltage supply => Page 125
P0563	16947	Voltage supply too high	

Fault code		Fault text	Fault elimination
SAE	V.A.G		

satelettronica

Fault code		Fault text	Fault elimination
P0571	16955	Brake light switch -F,implausible signal1)	- Check brake light switch and brake pedal switch => Page 134 - Renew engine control unit=>Page 126
P0604	16988	Control unit defective	
P0605	16989	Control unit defective	

1) The system monitors both brake light switch -F and brake pedal switch -F47.

4 - Fault table: from V.A.G code 17510 / SAE P1 codes

4.1 - Fault table: from V.A.G code 17510 / SAE P1 codes

Notes:

- The fault code overview is listed according to SAE or V.A.G code.
- Erase fault memory after rectifying fault =>Page 7 .

Fault code		Fault text	Fault elimination
SAE	V.A.G		
P1102	17510	Bank 1, probe 1 heating element circuit, short to positive	- Check Lambda probe heating before catalyst => Page 80
P1105	17513	Bank 1, probe 2 heating element circuit short to positive	- Check Lambda probe heating after catalyst => Page 83
P1115	17523	Bank 1, probe 1 heating current circuit short to earth	- Check Lambda probe heating before catalyst => Page 80
P1116	17524	Bank 1, probe 1 heating element circuit, open circuit	
P1117	17525	Bank1, probe 2 heating current circuit short to earth	- Check Lambda probe heating after catalyst => Page 83
P1118	17526	Bank 1, probe 2 heating element circuit open circuit	

Fault code		Fault text	Fault elimination
SAE	V.A.G		
P1151	17559	Bank 1, mixture adaption, region 1 Below lean limit	- Check fuel pressure regulator and holding pressure => Page 107
			- Check injectors =>Page 100
			- Check fuel pump: => Repair group 20; Checking fuel pump
			- Check intake system for leaks => Page 110
			- Check exhaust system for leaks: => Repair group 26; Removing and installing parts of exhaust system
Continued on next page			

Fault code		Fault text	Fault elimination
SAE	V.A.G		
P1151	17559	Continuation Bank 1, mixture adaption, region 1 Below lean limit	Check exhaust gas recirculation system: => Repair group 26; Exhaust gas recirculation system

satelettronica
Protected by copyright. Copying for private or commercial purposes, in part or in whole, is not permitted unless authorised by Volkswagen AG. Volkswagen AG does not guarantee or accept any liability with respect to the correctness of information in this document. Copyright by Volkswagen AG.

Fault code		Fault text	Fault elimination
			- Check activated charcoal filter system for leaks: => Repair group 20; Activated charcoal filter system
			- Check Lambda probe and Lambda regulation before catalyst => Page 115
			- Check Lambda probe and Lambda regulation after catalyst => Page 118

Fault code		Fault text	Fault elimination
SAE	V.A.G		
P1152	17560	Bank 1, mixture adaption region 2 Below lean limit	- Check fuel pressure regulator and holding pressure => Page 107
			- Check injectors =>Page 100
			- Check fuel pump: => Repair group 20; Checking fuel pump
			- Check intake system for leaks => Page 110
			- Check exhaust system for leaks: => Repair group 26; Removing and installing parts of exhaust system
Continued on next page			

Fault code		Fault text	Fault elimination
SAE	V.A.G		
P1152	17560	Continuation Bank 1, mixture adaption region 2 Below lean limit	Check exhaust gas recirculation system: => Repair group 26; Exhaust gas recirculation system
			- Check activated charcoal filter system for leaks: => Repair group 20; Activated charcoal filter system
			- Check Lambda probe and Lambda regulation before catalyst => Page 115
			- Check Lambda probe and Lambda regulation after catalyst => Page 118

Fault code		Fault text	Fault elimination
SAE	V.A.G		
P1155	17563	Intake manifold pressure sender -G71short to positive1)	- Check intake manifold pressure sender =>Page 87
P1156	17564	Intake manifold pressure sender -G71 open circuit/short to earth1)	
P1157	17565	Intake manifold pressure sender -G71 voltage supply1)	
P1158	17566	Intake manifold pressure sender-G71 implausible signal1)	

1) Engine control unit switches on the EPC warning lamp in dash panel insert with this fault. Significance of EPC warning lamp => 2 .

Fault code		Fault text	Fault elimination
SAE	V.A.G		

satelettronica

Fault code		Fault text	Fault elimination
P1165	17573	Bank 1, mixture adaption region 1 Richness limit surpassed	- Check fuel pressure regulator and holding pressure => Page 107
			- Check injectors =>Page 100
			- Check fuel pump: => Repair group 20; Checking fuel pump
			- Check intake system for leaks => Page 110
			- Check exhaust system for leaks: => Repair group 26; Removing and installing parts of ex-haust system
Continued on next page			

Fault code		Fault text	Fault elimination
SAE	V.A.G		
P1165	17573	Continuation Bank 1, mixture adaption region 1 Richness limit surpassed	Check exhaust gas recirculation system: => Repair group 26; Exhaust gas recirculation system
			- Check activated charcoal filter system for leaks: => Repair group 20; Activated charcoal filter system
			- Check Lambda probe and Lambda regulation before cat-alyst => Page 115
			- Check Lambda probe and Lambda regulation after catalyst => Page 118

Fault code		Fault text	Fault elimination
SAE	V.A.G		
P1166	17574	Bank 1, mixture adaption region 2 Richness limit surpassed	- Check fuel pressure regulator and holding pressure => Page 107
			- Check injectors =>Page 100
			- Check fuel pump: => Repair group 20; Checking fuel pump
			- Check intake system for leaks => Page 110
			- Check exhaust system for leaks: => Repair group 26; Removing and installing parts of ex-haust system
Continued on next page			

Fault code		Fault text	Fault elimination
SAE	V.A.G		
P1166	17574	Continuation Bank 1, mixture adaption region 2 Richness limit surpassed	Check exhaust gas recirculation system: => Repair group 26; Exhaust gas recirculation system
			- Check activated charcoal filter system for leaks: => Repair group 20; Activated charcoal filter system
			- Check Lambda probe and Lambda regulation before cat-alyst => Page 115
			- Check Lambda probe and Lambda regulation after catalyst => Page 118

Protected by copyright. Copying for private or commercial purposes, in part or in whole, is not permitted unless authorised by Volkswagen AG. Volkswagen AG does not guarantee or accept any liability with respect to the correctness of information in this document. Copyright by Volkswagen AG.
sateletronica

Fault code		Fault text	Fault elimination
SAE	V.A.G		
P1171	17579	Angle sender 2 for throttle valve drive -G188 implausible signal 1)	- Check throttle valve control part => Page 85
P1172	17580	Angle sender 2 for throttle valve drive -G188 signal too low 1)	
P1173	17581	Angle sender 2 for throttle valve drive -G188 signal too high 1)	

1) Engine control unit switches on the EPC warning lamp in dash panel insert with this fault. Significance of EPC warning lamp => 2 .

Fault code		Fault text	Fault elimination
SAE	V.A.G		
P1174	17582	Bank 1, fuel measurement system Deviation in injection timing	- Check fuel pressure regulator and holding pressure => Page 107
			- Check injectors =>Page 100
			- Check fuel pump: => Repair group 20; Checking fuel pump
			- Check intake system for leaks => Page 110
			- Check exhaust system for leaks: => Repair group 26; Removing and installing parts of exhaust system
Continued on next page			

Fault code		Fault text	Fault elimination
SAE	V.A.G		
P1174	17582	Continuation Bank 1, fuel measurement system Deviation in injection timing	Check exhaust gas recirculation system: => Repair group 26; Exhaust gas recirculation system
			- Check activated charcoal filter system for leaks: => Repair group 20; Activated charcoal filter system
			- Check Lambda probe and Lambda regulation before catalyst => Page 115
			- Check Lambda probe and Lambda regulation after catalyst => Page 118

Fault code		Fault text	Fault elimination
SAE	V.A.G		
P1176	17584	Bank 1 Lambda corr. rear cat, Control limit reached	- Check air intake system for leaks (unmetered air) => Page 110
			- Check Lambda probe and Lambda regulation after catalyst => Page 118
			- Check Lambda probe heating after catalyst => Page 83

Fault code		Fault text	Fault elimination
SAE	V.A.G		

Copyright by Volkswagen AG. Volkswagen AG does not guarantee or accept any liability with respect to the correctness of information in this document. Copyright by Volkswagen AG. Protected by copyright. Copying for private or commercial purposes, in part or in whole, is not permitted unless authorised by Volkswagen AG.
satelettronica

P1178	17586	Linear Lambda probe / pump current, Open circuit	- Check Lambda probe and Lambda regulation before catalyst => Page 115
P1179	17587	Linear Lambda probe / pump current, Short to earth	
P1180	17588	Linear Lambda probe / pump current, Short to positive	- Check Lambda probe heating before catalyst => Page 80
P1181	17589	Linear Lambda probe/ Reference voltage Open circuit	- Check Lambda probe and Lambda regulation before catalyst=> Page 115
P1182	17590	Linear Lambda probe/ Reference voltage Short to earth	- Check Lambda probe heating before catalyst => Page 80
P1183	17591	Linear Lambda probe/ Reference voltage Short to positive	- Check ignition wiring and spark plugs => Page 140
P1190	17598	Linear Lambda probe/ Reference voltage Implausible	- Check misfire recognition => Page 152

Fault code		Fault text	Fault elimination
SAE	V.A.G		
P1196	17604	Bank 1, probe 1 heating current circuit electrical fault	- Check Lambda probe heating before catalyst => Page 80
P1198	17606	Bank 1, probe 2 heating current circuit electrical fault	- Check Lambda probe heating after catalyst => Page 83
P1213	17621	Injector Cyl. 1 -N30 short to positive	- Check injectors =>Page 100
P1214	17622	Injector Cyl. 2 -N31 short to positive	
P1215	17623	Injector Cyl. 3 -N32 short to positive	
P1216	17624	Injector Cyl. 4 -N33 short to positive	

Fault code		Fault text	Fault elimination
SAE	V.A.G		
P1237	17645	Injector Cyl. 1 -N30 open circuit	- Check injectors =>Page 100
P1238	17646	Injector Cyl. 2 -N31 open circuit	
P1239	17647	Injector Cyl. 3 -N32 open circuit	
P1240	17648	Injector Cyl. 4 -N33 open circuit	
P1253	17661	Fuel consumption signal, Short to earth	- Check combi-instrument: => Current flow diagrams, Electrical fault finding and Fitting locations binder

Fault code		Fault text	Fault elimination
SAE	V.A.G		
P1341	17749	Ignition output 1, short to earth	- Check ignition transformer => Page 147
P1342	17750	Ignition output 1, Short to positive	- Check Hall sender=> Page 145
P1343	17751	Ignition output 2, short to earth	
P1344	17752	Ignition output 2, short to positive	
P1348	17756	Ignition output 1, open circuit	
P1349	17757	Ignition output 2, open circuit	
P1386	17794	Control unit defective 1)	- Renew engine control unit => Page 126
P1388	17796	Control unit defective 1)	
P1398	17806	Engine speed signal, TD short to earth	- Check engine speed sender =>Page 98

Protected by copyright. Copyright by Volkswagen AG. Volkswagen AG does not guarantee or accept any liability with respect to the correctness of information in this document. Copying for private or commercial purposes, in part or in whole, is not permitted unless authorised by Volkswagen AG.
satelettronica

P1399	17807	Engine speed signal, TD short to positive	

1) Engine control unit switches on the EPC warning lamp in dash panel insert with this fault. Significance of EPC warning lamp => 2 .

Fault code		Fault text	Fault elimination
SAE	V.A.G		
P1401	17809	Valve for exhaust gas recirculation -N18 short to earth	- Check EGR valve=>Page 21 , Final control diagnosis
P1402	17810	Valve for exhaust gas recirculation -N18 short to positive	
P1403	17811	Exhaust gas recirculation system control difference	
P1404	17812	Exhaust gas recirculation system, Basic settings not performed	- Perform basic setting (Measured value block 74) =>Page 51
P1410	17818	Tank breathing valve -N80 short to positive	- Check activated charcoal filter solenoid valve 1=> Page 21 , Final control diagnosis
P1425	17833	Tank breathing valve -N80 short to earth	
P1426	17834	Tank breathing valve -N80 open circuit	

Fault code		Fault text	Fault elimination
SAE	V.A.G		
P1439	17847	EGR potentiometer - G212, Fault in basic setting	
P1440	17848	EGR valve -N18, Open circuit	- Check EGR valve=>Page 21 , Final control diagnosis
P1441	17849	EGR valve -N18 Open circuit/short to earth	=> Repair group 26; Exhaust gas recirculation system
P1442	17850	EGR potentiometer -G212, Signal too high	=>
P1443	17851	Exhaust gas recirculation potentiometer - G212, signal too low	
P1444	17852	Exhaust gas recirculation potentiometer - G212 Implausible signal	
P1500	17908	Fuel pump relay -J17, Fault in electrical circuit	- Check fuel pump relay: => Current flow diagrams, Electrical fault finding and Fitting location binder
P1501	17909	Fuel pump relay -J17, Short to earth	
P1502	17910	Fuel pump relay -J17, short to positive	

Fault code		Fault text	Fault elimination
SAE	V.A.G		
P1504	17912	Air intake system, Leak recognised1)	- Check air intake system for leaks (unmetered air) => Page 110
P1541	17949	Fuel pump relay - J17, Open circuit	- Check fuel pump relay: => Current flow diagrams, Electrical fault finding and Fitting locations binder
P1542	17950	Angle sender for throttle valve drive -G187 implausible signal1)	- Check throttle valve control part => Page 85
P1543	17951	Angle sender for throttle valve drive -G187 signal too low 1)	
P1544	17952	Angle sender for throttle valve drive -G187 signal too high 1)	

Protected by Copyright - Copyright by Volkswagen AG. Unauthorised use or distribution is prohibited. Volkswagen AG does not guarantee or accept any liability with respect to the correctness of information in this document. Copyright by Volkswagen AG.

satelettronica

P1545	17953	Throttle valve control malfunction 1)	

1) Engine control unit switches on the EPC warning lamp in dash panel insert with this fault. Significance of EPC warning lamp => 2 .

Fault code		Fault text	Fault elimination
SAE	V.A.G		
P1553	17961	Elevation sensor signal/intake manifold pressure, Implausible ratio1), 2)	- Check intake manifold pressure sender =>Page 87
			- Check intake system for leaks (unmetered air) => Page 110
			- Check exhaust gas recirculation system: => Repair group 26; Exhaust gas recirculation system
			- Check activated charcoal filter solenoid valve 1: => Repair group 20; Activated charcoal filter system; Checking solenoid valve 1 for activated charcoal filter Checking solenoid valve 1 for activated charcoal filter
			- Check throttle valve control part => Page 85

1) Engine control unit switches on the EPC warning lamp in dash panel insert with this fault. Significance of EPC warning lamp => 2 .

2) After this fault has been rectified, run vehicle at idling speed for at least 5 minutes, so that a correct adaption is guaranteed.

Fault code		Fault text	Fault elimination
SAE	V.A.G		
P1554	17962	Throttle valve control part -J338 Basic setting condition not met 1)	- Adapt engine control unit to throttle valve control part => Page 128
P1558	17966	Throttle valve drive -G186 electrical fault in current circuit 1)	
P1559	17967	Throttle valve control part -J338 Fault in basic setting 1)	
P1560	17968	Maximum engine revs surpassed	- Repair mechanical damage
P1564	17972	Throttle valve control part -J338 low voltage at basic setting 1)	- Check battery, charge if needed Adapt engine control unit to throttle valve control part => Page 128
P1565	17973	Throttle valve control part -J338 lower limit not reached 1)	- Check throttle valve control part=> Page 85
P1568	17976	Throttle valve control part -J338 mechanical fault 1)	

1) Engine control unit switches on the EPC warning lamp in dash panel insert with this fault. Significance of EPC warning lamp => 2 .

Fault code		Fault text	Fault elimination
SAE	V.A.G		
P1570	17978	Engine control unit blocked	- Adapt engine control unit to electronic immobilizer => Page 130
P1581	17989	Throttle valve control part -J338 Basic setting not performed	- Adapt engine control unit to throttle valve control part => Page 128

satelettronica

Fault code		Fault text	Fault elimination
P1602	18010	Voltage supply Kl. 30, Voltage too low	- Check control unit voltage supply => Page 123 Check alternator: => Current flow diagrams, Electrical fault finding and Fitting locations
P1603	18011	Control unit defective	- Renew engine control unit => Page 126
P1610	18018	Control unit defective	
P1611	18019	Request fault lamp be switched on, Short to earth	- Check exhaust emissions warning lamp: => Current flow diagrams, Electrical fault finding and Fitting locations binder
P1612	18020	Engine control unit incorrectly coded	- Code engine control unit => Page 127

Fault code		Fault text	Fault elimination
SAE	V.A.G		
P1613	18021	Request fault lamp be switched on, Open circuit / short to positive	- Check exhaust emissions warning lamp: => Current flow diagrams, Electrical fault finding and Fitting locations binder
P1623	18031	Drive train data bus, No communication	
P1626	18034	Drive train data bus, No messages from gearbox CU	- Check data bus => Page 138
P1630	18038	Accelerator pedal position sender -G79 signal too low 1)	- Check accelerator pedal position sender: => Repair group 20; Accelerator mechanism; Servicing accelerator mechanism Servicing accelerator mechanism
P1631	18039	Accelerator pedal position sender -G79 signal too high 1)	
P1633	18041	Accelerator pedal position sender 2 -G185 signal too low 1)	
P1634	18042	Accelerator pedal position sender 2 -G185 signal too high 1)	
P1635	18043	Drive train data bus, No message from air conditioner CU	- Check data bus => Page 138
P1636	18044	Drive train date bus, No message from airbag CU	
P1637	18045	Drive train data bus, No message from electronic CE	

1) Engine control unit switches on the EPC warning lamp in dash panel insert with this fault. Significance of EPC warning lamp => 2 .

Fault code		Fault text	Fault elimination
SAE	V.A.G		
P1639	18047	Accelerator position sender 1/2 -G79+G185 implausible signal 1)	- Check accelerator pedal position sender: => Repair group 20; Accelerator mechanism; Servicing accelerator mechanism Servicing accelerator mechanism
P1640	18048	Control unit defective	- Replace engine control unit => Page 126
P1648	18056	Drive train data bus defective	- Check data bus => Page 138
P1649	18057	Drive train data bus message from ABS control unit missing	

Protected by copyright. Copying for private or commercial purposes, in part or in whole, is not permitted unless authorised by Volkswagen AG. Volkswagen AG does not guarantee or accept any liability with respect to the correctness of information in this document. Copyright by Volkswagen AG.
satelettronica

P1650	18058	Drive train data bus no message from combi-instrument	

1) Engine control unit switches on the EPC warning lamp in dash panel insert with this fault. Significance of EPC warning lamp => 2 .

Fault code		Fault text	Fault elimination
SAE	V.A.G		
P1656	18064	Air conditioning input/output Short to earth	- Check air conditioning: => Current flow diagrams, Electrical fault finding and Fitting location binder
P1657	18065	Air conditioning input/output Short to positive	
P1677	18085	Electr.throttle control fault lamp - K132 Short to positive1)	- Check fault lamp: => Repair group 20; Electronic accelerator regulation; Checking electronic accelerator fault lamp Checking electronic accelerator fault lamp
P1678	18086	Electr. throttle control fault lamp -K132 Short to earth 1)	
P1679	18087	Electr. throttle control fault lamp -K132 Open circuit 1)	

1) Engine control unit switches on the EPC warning lamp in dash panel insert with this fault. Significance of EPC warning lamp => 2 .

Fault code		Fault text	Fault elimination
SAE	V.A.G		
P1690	18098	Self-diagnosis fault lamp -K83 Current circuit electrical fault	- Check exhaust warning lamp => Page 3
P1691	18099	Self-diagnosis fault lamp -K83 Open circuit	
P1692	18100	Self-diagnosis fault lamp -K83 Short to earth	
P1693	18101	Self-diagnosis fault lamp -K83 current circuit electrical fault	

5 - Final control diagnosis

5.1 - Final control diagnosis

5.2 - Performing final control diagnosis

The final control diagnosis activates the following components in the stated sequence:

1. Throttle valve positioner (V60)

2. Activated charcoal filter solenoid valve 1 (N80)

3. Exhaust gas recirculation valve (N18)

Protected by copyright. Copying for private or commercial purposes, in part or in whole, is not permitted unless authorised by Volkswagen AG. Volkswagen AG does not guarantee or accept any liability with respect to the correctness of information in this document. Copyright by Volkswagen AG.
satelettronica

4. Engine speed signal

5. Fuel pump relay (J17)

6. Engine/air conditioner compressor electrical connection

Special tools, workshop equipment, testers, measuring instruments and auxiliary items required

- Fault reader V.A.G 1551 or vehicle system tester V.A.G 1552 with cable V.A.G 1551/3A
- Test box V.A.G 1598/31
- Hand multimeter V.A.G 1526 or multimeter V.A.G 1715
- Diode test lamp V.A.G 1527
- Adapter set V.A.G 1594

- Current flow diagram

Check conditions

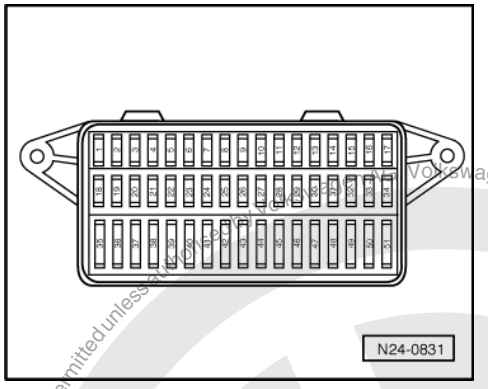

- -> Fuses No. 1, 3, 11, 15, 23, 30, 31, 32, 34, 36, 37, 39 and 40 must be OK.
- The battery voltage must be at least 11.5 V.
- All electrical consumers, e.g. lights and rear window heating must be switched off.
- Throttle valve potentiometer (G69) OK.

Test requirements for vehicles with air conditioning system

- Vehicle at room temperature (warmer than + 15 °C)
- Air conditioning system switched on
- Select lowest temperature and highest blower speed

Notes:

- The final control diagnosis can only be carried out if the engine is stationary and ignition switched on.
- The final control diagnosis will be aborted if the engine is started or a rotational impulse is recognised.

- During the final control diagnosis the individual final controls will be activated until advancing to the next final control by pressing the ⇒ button.
- The final controls are checked acoustically or by touching.

Work sequence

- Connect the fault reader V.A.G 1551 (V.A.G 1552). Then switch ignition on and select engine control unit with the "Address word" 01.
  (Connecting fault reader and selecting engine control unit => Page 4 .)

-> Indicated on display:

```
Rapid data transfer      HELP
Select function XX
```

- Operate fault reader taking into account the information on the display:

satelettronica

- Press keys 0 and 3 for the function "Final control diagnosis".

-> Indicated on display:

```
Rapid data transfer     Q
03 Final control diagnosis
```

Activating throttle valve positioner (V60):

- Confirm input with Q key.

-> Indicated on display:

```
Final control diagnosis
Throttle valve positioner-V60
```

The throttle valve positioner must open and close the throttle valve until switching to the next final control by pressing the ⇒key.

If the throttle valve positioner does not move:

- Check throttle valve positioner
  =>Page 85 , Checking throttle valve control part.

Activating activated charcoal filter solenoid valve 1 (N80):

- Press ⇒key.

-> Indicated on display:

```
Final control diagnosis
Activ. charcoal filter solenoid valve
1     -N80
```

The solenoid valve must click until you activate the next final control element by pressing ⇒key.

If the solenoid valve does not click:

- Continue check => Page 25 .

Activating exhaust gas recirculation valve (N18):

- Press ⇒key.

-> Indicated on display:

```
Final control diagnosis
Exhaust gas recirculation valve -N18
```

The exhaust gas recirculation valve (engine compartment, left, on cylinder head) must click until the next final control is activated by pressing the ⇒key.

If the exhaust gas recirculation valve does not click:

- Continue check => Page 26 .

Displaying engine speed signal:

- Press ⇒key.

-> Indicated on display:

```
Final control diagnosis
Engine speed signal
```

Protected by copyright. Copying for private, commercial purposes, in part or in whole, is not permitted unless authorised by Volkswagen AG. Volkswagen AG does not guarantee or accept any liability with respect to the correctness of information in this document. Copyright by Volkswagen AG.
satelettronica

The rev. counter must display approx. 3000 rpm, until next final control element is activated by pressing the ⇒key.

If no display appears:

- Check the wiring to rev counter
  =>Page 137 , checking rpm signal.

Activating fuel pump relay (J17):

- Press ⇒key.

-> Indicated on display:

```
Final control diagnosis
Fuel pump relay J17
```

The fuel pump relay (on the relay plate) must click until the next final control is activated by pressing the ⇒key.

Note:

During the activation of the fuel pump relay (on relay plate), the fuel pump must be heard to run at intervals. Do not activate door contact switch during the test.

If the relay does not click:

- Check fuel pump relay:

=> Current flow diagrams, Electrical fault finding and Fitting locations

Checking electric wiring to air conditioner:

Note:

The test step is only for vehicles with air conditioner. On vehicles without air conditioner end final control diagnosis by pressing ⇒key.

-> Indicated on display:

```
Final control diagnosis
Engine/air cond. compr. electr.
connection
```

The air conditioner compressor magnetic coupling must click, until ending final control diagnosis by pressing ⇒key.

If the magnetic coupling does not click:

- Check wiring from / to air conditioner
  =>Page 133

If the magnetic coupling clicks:

- Press ⇒key.

-> Indicated on display:

```
Rapid data transfer      HELP
Select function XX
```

- Press keys 0 and 6 for the "End output" function and confirm input with the Q key.

-> Indicated on display:

```
Rapid data transfer      HELP
Enter address word XX
```

Protected by copyright. Copying for private or commercial purposes, in part or in whole, not permitted unless authorised by Volkswagen AG. Volkswagen AG does not guarantee or accept any liability with respect to the correctness of information in this document. Copyright by Volkswagen AG.
satelettronica

- Switch off ignition.

Continuation of check when the activated charcoal filter solenoid 1 does not click:

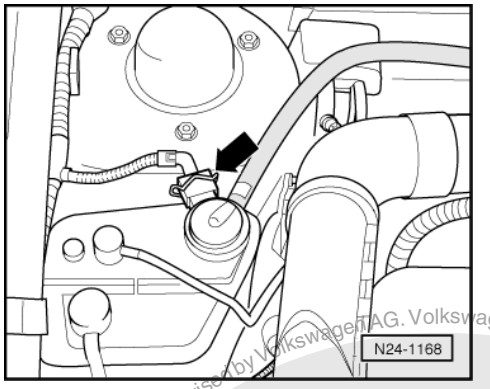

- -> Pull the 2 pin connector off solenoid valve 1 (N80) -arrow-.

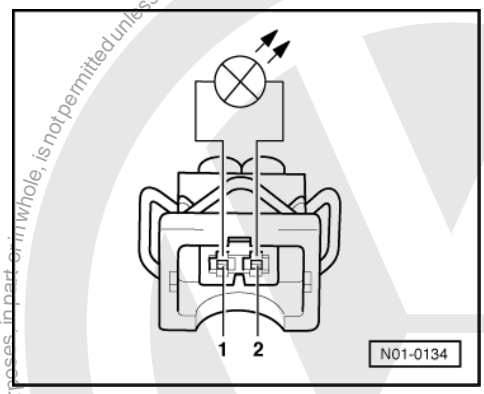

-> Connect diode test lamp V.A.G 1527 using adapter cables from V.A.G 1594 to detached connector. The LED must flash (bright/darker)

LED flashes:

- Proceed with final control diagnosis until completed.
- Switch off ignition.
- Replace solenoid valve 1 (N80):

=> Repair group 20; Activated charcoal filter system; Removing and installing parts of activated charcoal filter system Activated charcoal filter system Removing and installing parts of activated charcoal filter system

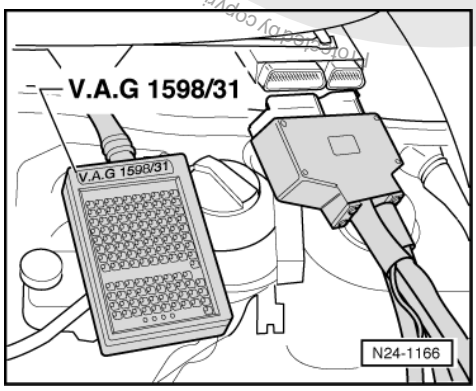

LED does not flash:

- Proceed with final control diagnosis until completed.
- Switch off ignition.
- Remove left plenum chamber cover.

Protected by copyright. Copying for private or commercial purposes, in part or in whole, is not permitted unless authorised by Volkswagen AG. Volkswagen AG does not guarantee or accept any liability with respect to the correctness of information in this document. Copyright by Volkswagen AG.
satelettronica

- -> Connect test box V.A.G 1598/31 to control unit wiring harness. The engine control unit remains disconnected.

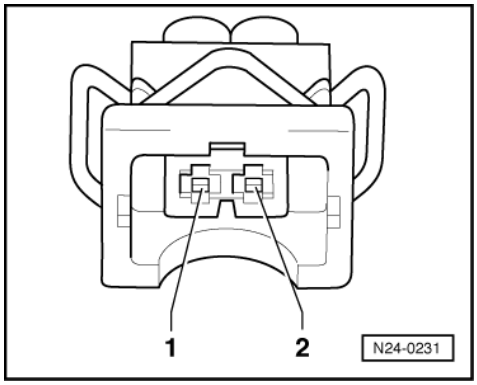

- -> Check wire for open circuit between test box socket 64 and 2-pin connector contact 2 using current flow diagram.
  Wire resistance: max. 1.5 ω
- Additionally check wire for short to battery positive and earth.
  Specification: ∞ω
- Check wire between 2 pin connector contact 1 and the fuel pump relay (J17) for open circuit using current flow diagram.
  Wire resistance: max. 1.5 ω

If no wiring fault is detected:

- Replace engine control unit
  => Page 126 .

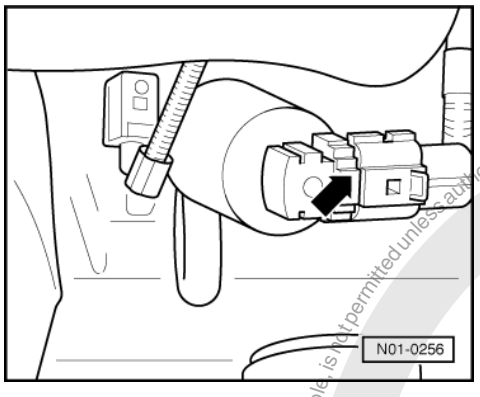

Continuation of check when the exhaust gas recirculation valve does not click:

- -> Pull the 6-pin connector off EGR valve (N18) -arrow- (on camshaft housing, left).

LED flashes:

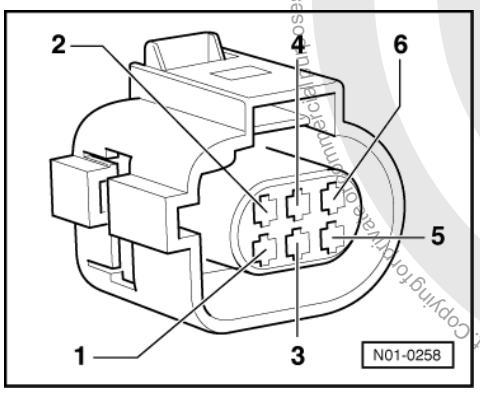

Protected by copyright. Copyright by Volkswagen AG.
Copying for private or commercial purposes, in part or in whole, is not permitted unless authorised by Volkswagen AG. Volkswagen AG does not guarantee or accept any liability with respect to the correctness of information in this document.
satelettronica

- -> Connect the diode test lamp V.A.G 1527 to detached connector at contacts 1+5 using adapter cables from V.A.G 1594.
  The LED must flash (bright/darker)
- Proceed with final control diagnosis until completed.
- Switch off ignition.
- Replace the exhaust gas recirculation valve (N18):

=> Repair group 26; Exhaust gas recirculation system; Servicing parts of the exhaust gas recirculation system Exhaust gas recirculation system Servicing parts of the exhaust gas recirculation system

LED does not flash:

- Proceed with final control diagnosis until completed.

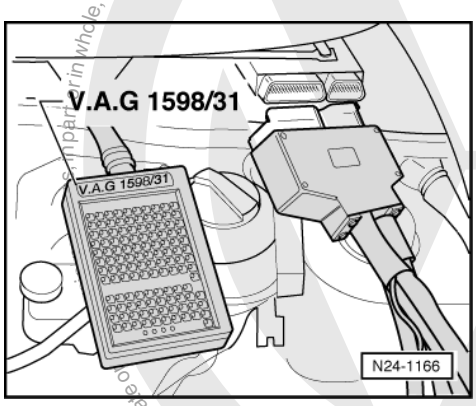

- Switch off ignition.
- Remove left plenum chamber cover.
- -> Connect test box V.A.G 1598/31 to control unit wiring harness. The engine control unit remains disconnected.

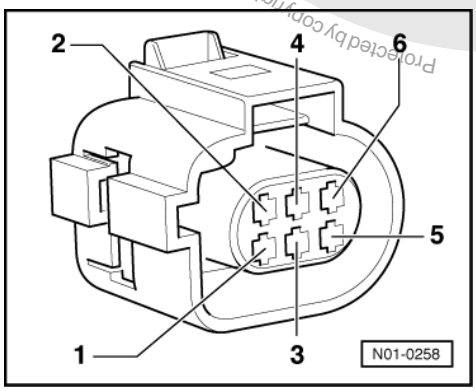

- -> Check wire for open circuit between test box socket 114 and 6-pin connector contact 5 using current flow diagram.
  Wire resistance: max. 1.5 ω
- Additionally check wire for short to battery positive and earth.
  Specification: ∞ω
- Check wire between 2 pin connector contact 1 and the fuel pump relay (J17) for open circuit using current flow diagram.
  Wire resistance: max. 1.5 ω

If no wiring fault is detected:

- Replace engine control unit
  => Page 126 .

Copyright by Volkswagen AG. Protected by copyright. Copying for private or commercial purposes, in part or in whole, is not permitted unless authorised by Volkswagen AG. Volkswagen AG does not guarantee or assume any liability with respect to the correctness of information in this document.
satelettronica

6 - Readiness code

6.1 - Readiness code

Protected by copyright. Copying for private or commercial purposes, in part or in whole, is not permitted unless authorised by Volkswagen AG. Volkswagen AG does not guarantee or accept any liability with respect to the correctness of information in this document. Copyright by Volkswagen AG.

Function

The readiness code is an 8-digit number code which displays the status of the emission relevant diagnosis.

When the diagnosis of a system (e.g. tank venting system) has been successfully completed, the corresponding position in the number code will change from 1 to 0.

The diagnosis is performed at regular intervals during normal driving. It is recommended that the readiness code be generated after performing repairs on an emission relevant system, to guarantee that these systems function correctly. If a fault is detected during the diagnosis it will be entered in the fault memory.

Each time the fault memory is erased or the voltage supply is interrupted the readiness code will be erased.

6.2 - Reading readiness code

Special tools, workshop equipment, testers, measuring instruments and auxiliary items required

- Fault reader V.A.G 1551 with cable V.A.G 1551/3

Work sequence

- Connect the fault reader V.A.G 1551. Then switch ignition on and select engine control unit with the "Address word" 01.
  (Connecting fault reader and selecting engine control unit => Page 4 .)

-> Indicated on display:

```
Rapid data transfer      HELP
Select function XXX
```

- Press keys 1 and 5 for the "Readiness code" function and confirm entry with Q key.

Must appear on display when all diagnosis functions have been successfully completed:

-> Indicated on display:

```
Readiness code
00000000 - Test complete
```

- Press ⇒key.
- Press keys 0 and 6 for the "End data transfer" function and confirm input with the Q key.

-> Indicated on display:

```
Readiness code
00101101 - Test not complete
```

One of the diagnostic checks has not run through successfully:

- Press ⇒key.
- Generate readiness code => Page 29

Significance of figures in 8-digit number block for readiness code

The readiness code is generated only when all display zones show 0								
1	2	3	4	5	6	7	8	Diagnostic function

satelettronica

The readiness code is generated only when all display zones show 0								
							0	Catalyst
						0		Catalyst heating (currently no diagnosis/always "0")
					0			Activated charcoal filter system (tank venting system)
				0				Secondary air system (not fitted/always "0")
			0					Air conditioner (currently no diagnosis/always "0")
		0						Lambda probes
	0							Lambda probe heating
0								Exhaust gas recirculation

6.3 - Generating readiness code

Special tools, workshop equipment, testers, measuring instruments and auxiliary items required

- Fault reader V.A.G 1551 (or vehicle system tester V.A.G 1552) with cable V.A.G 1551/3

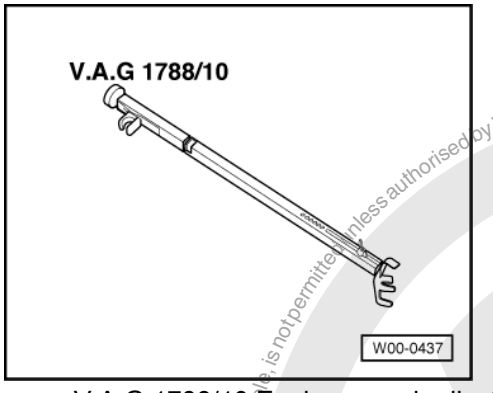

- -> V.A.G 1788/10 Engine speed adjuster

Test conditions

- Vehicle stationary
- On vehicles with automatic gearbox selector lever in "P" or "N" position
- All electrical consumers, e.g. lights and rear window heating must be switched off.
- Intake air temperature less than 60°C
  =>display group 04, display zone 4
- Coolant temperature must be at least 80 °C, =>display group 04, display zone 3.

Work sequence

- Connect fault reader V.A.G 1551 (V.A.G 1552). Start engine and select "Address word" 01 of engine control unit. When doing this the engine must be running at idling speed.
  (Connecting fault reader and selecting engine control unit => Page 4 .)

Work step 1: Interrogate fault memory

-> Indicated on display:

```
Rapid data transfer      HELP
Select function XXX
```

- Press keys 0 and 2 for function "Interrogate fault memory" and confirm entry with Q key.

-> The number of faults stored or "No fault recognised!" will be shown on the display.

```
X Faults recognised!
```

Protected by copyright. Copying or communication of any part or in whole, is not permitted unless authorised by Volkswagen AG. Volkswagen AG does not guarantee or accept any liability with respect to the correctness of information in this document. Copyright by Volkswagen AG.
satelettronica

If a fault is stored:

- Rectify faults printed out using fault table:
  SAE P0 codes=> Page 13

If no fault is stored:

- Press ⇒key.

Work step 2: Erase fault memory

-> Indicated on display:

```
Rapid data transfer      HELP
Select function XXX
```

- Press keys 0 and 5 for the function "Erase fault memory" and confirm entry with Q key.

Note:

The readiness code is reset or erased each time fault memory is erased.

-> Indicated on display:

```
Rapid data transfer
Fault memory is erased!
```

Note:

If the ignition is switched off between "Interrogate fault memory" and "Erase fault memory" the fault memory will not be erased.

- Press ⇒key.

Note:

- During the work sequence the engine must not be switched off.

Work step 3: Activated charcoal filter system diagnosis (tank breathing system)

-> Indicated on display:

```
Rapid data transfer      HELP
Select function XXX
```

- Press keys 0 and 4 for the "Introduce basic setting" function and confirm entry with Q key.

-> Indicated on display:

```
Basic setting
Input display group number XXX
```

- Press keys 0, 7 and 0 for "Display group number 70" and confirm entry with Q key.

-> Indicated on display:
(1...4 = Display zones)

```
System in basic setting      70
     1      2      3      4
```

When the diagnosis is initiated by the engine control unit the display in display zone 4 jumps from "Test OFF" to "Test ON"

- Run engine at idling speed until the
  specification "TVV OK"
  is displayed in display zone 4.

Protected by copyright. Copying for commercial purposes, in part or in whole, is not permitted unless authorised by Volkswagen AG. Volkswagen AG does not guarantee or accept any liability with respect to the correctness of information in this document. Copyright by Volkswagen AG.

satelettronica

If the display does not indicate as described:

- Interrogate fault memory => Page 7 .
- Generate about 3 throttle bursts and repeat the diagnosis.

If the display indicates as described:

- Press C key.

Work step 4: Lambda probe ageing diagnosis (cycle duration monitor)

-> Indicated on display:

```
Basic setting
Input display group number XXX
```

- Press keys 0, 3 and 4 for "Display group number 34" and confirm entry with Q key.

-> Indicated on display:
(1...4 = Display zones)

```
System in basic setting     34
     1     2     3     4
```

- Rev up engine twice to over 5,000 rpm.
- Set engine speed to 1500...3900 rpm using speed regulator V.A.G 1788/10:
- Maintain the engine speed until the display
  in display zone 4 jumps from "Test OFF" to "Test ON".
- Continue to maintain the same speed until
  specification "B1-P1 OK"
  appears in display zone 4.
- Press ⇒key.

-> Indicated on display:

```
Rapid data transfer      HELP
Select function XXX
```

- Press keys 0 and 8 for the function "Read measured value block" and confirm entry with Q key.

-> Indicated on display:

```
Read measured value block
Input display group number XXX
```

- Press keys 0, 3 and 0 for the "Display group number 30" and confirm entry with Q key.

-> Indicated on display:
(1...4 = Display zones)

```
Read measured value block      30
     1     2     3     4
```

- Check the operating condition of the Lambda control in front of catalyst (display zone 1):
  Specification: 111
- Check the operating condition of the Lambda regulation after catalyst (display zone 2):
  Specification: 110

Note:

The 3rd bit in display zone 2 will not be set to 1 until partial throttle (2500-4000 rpm) is reached.

Significance of 3 digit number block in display zones 1 and 2:

Significance if display = 1			
1	2	3	

satelettronica
Copyright by Volkswagen AG. Volkswagen AG does not guarantee or accept any liability with respect to the correctness of information in this document. Copying or in whole, is not permitted unless authorised by Volkswagen AG. Copyright by Volkswagen AG. Copying for private or commercial purposes, in part or in whole, is not permitted unless authorised by Volkswagen AG.

Significance if display = 1			
		1	Lambda regulation active (partial throttle)
	1		Lambda probe operationally ready
1			Lambda probe heating on

If the specifications are not obtained:

- Interrogate fault memory => Page 7 .

If the specifications are obtained:

- Press ⇒key.

Work step 5: Catalyst diagnosis

Note:

This diagnosis is terminated only when there are no faults in the Lambda probe and activated charcoal filter systems.

-> Indicated on display:

```
Rapid data transfer      HELP
Select function XXX
```

- Press keys 0 and 4 for the function "Initiating basic settings" and confirm entry with Q key.

-> Indicated on display:

```
Basic setting
Input display group number XXX
```

- Press keys 0, 4 and 6 for "Display group number 46" and confirm entry with Q key.

-> Indicated on display:
(1...4 = Display zones)

```
System in basic setting     46
     1     2     3     4
```

- Maintain engine speed at 1500...3900 rpm until display in display zone 4 jumps from "Test OFF" to "Test ON".
  Catalyst temperature in display zone 2 must be at least 300 °C.
- Continue to maintain engine speed at 1500...3900 rpm until Specification "Cat B1 OK" appears in display zone 4.

Note:

It can take several minutes for the display to change from "Test ON" to "Cat B1 OK".

If the specifications are not attained:

- Interrogate fault memory => Page 7 .

If the specification is obtained:

- Press C key.

Work step 6: Exhaust gas recirculation system diagnosis

-> Indicated on display:

Protected by copyright. Copying for private or commercial purposes, in part or in whole, is not permitted unless authorised by Volkswagen AG. Volkswagen AG does not guarantee or accept any liability with respect to the correctness of information in this document. Copyright by Volkswagen AG.
satelettronica

```
Basic setting
Input display group number XXX
```

- Press keys 0, 7 and 5 for the "Display group number 75" and confirm entry with Q key.

-> Indicated on display:
(1...4 = Display zones)

```
System in basic setting     75
     1     2     3     4
```

- Rev. up briefly maximum engine speed approx. 5 times.

If the diagnosis is initiated from engine control unit the display in display zone 4 jumps from "Test OFF" to "Test ON"

- Leave the engine running at idle until
  specification "Sys. OK"
  appears in display zone 4.

If the display does not indicate as described:

- Interrogate fault memory => Page 7 .

If the display indicates as described:

- Press ⇒key.
- Press keys 0 and 6 for the "End output" function and confirm input with the Q key.
- Read readiness code=> Page 28

7 - Measured value blocks

7.1 - Measured value blocks

7.2 - Safety precautions

Observe following if test and measuring instruments are required during a test drive:

- Test and measuring instruments must be secured to rear seat and operated by a 2nd person from this location.

  If test and measuring instruments are operated from front passenger's seat and the vehicle is involved in an accident, there is a possibility that the person sitting in this seat may receive serious injuries when the airbag is triggered.

7.3 - Read measured value block

- Fault reader V.A.G 1551 with cable V.A.G 1551/3

Test conditions

- Coolant temperature must be at least 80 °C, =>display group 04, display zone 3.
- All electrical consumers, e.g. lights and rear window heating must be switched off.
- If the vehicle is equipped with an air conditioning system, this must be switched off.

- On vehicles with automatic gearbox selector lever in "P" or "N" position
- No faults must be stored in fault memory

Protected by copyright. Copyright by Volkswagen AG. Copyright by Volkswagen AG. Volkswagen AG does not guarantee or accept any liability with respect to the correctness of information in this document. Copying for private or commercial purposes, in part or in whole, is not permitted unless authorised by Volkswagen AG.
satelettronica

=> Page 7 , interrogating fault memory

Work sequence

- Connect fault reader V.A.G 1551 (V.A.G 1552). Start engine and select "Address word" 01 of engine control unit. When doing this the engine must be running at idling speed.
  (Connecting fault reader and selecting engine control unit => Page 4 .)

-> Indicated on display:

```
Rapid data transfer      HELP
Select function XXX
```

- Press keys 0 and 8 for the function "Read measured value block" and confirm entry with Q key.

-> Indicated on display:

```
Read measured value block
Input display group number XXX
```

- Select required display group number.

Note:

The display group number 1 is an example, to illustrate the sequence.

- Press keys 0, 0 and 1 for "Display group number 1" and confirm entry with Q key.

-> Indicated on display:
(1...4 = Display zones)

```
Read measured value block      1
     1     2     3     4
```

Note:

To change to another display group proceed as follows:

Display group	V.A.G 1551	V.A.G 1552
Higher	Press key 3	Press ↑key
Lower	Press key 1	Press ↓key
Skip	Press key C	Press key C

- If the specifications in all display zones are obtained, press ⇒key.

-> Indicated on display:

```
Rapid data transfer      HELP
Select function XXX
```

- Press keys 0 and 6 for the "End data transfer" function and confirm input with the Q key.

Note:

Measured value blocks which are not described in this chapter are currently only intended for the research and development and production. The values displayed are not relevant for service department fault finding.

Protected by copyright. Copying for private or commercial purposes, in part or in whole, is not permitted unless authorised by Volkswagen AG. Volkswagen AG does not guarantee or accept any liability with respect to the correctness of information in this document. Copyright by Volkswagen AG.
satelettronica

8 - Evaluating measured value blocks, display groups 0...6 -Basic functions

8.1 - Evaluating measured value blocks, display groups 0...6 -Basic functions

Display group 1 -Basic functions-						
Read measured value block 1				◂ Indicated on display		
xxxx rpm	xx.x °C	xx.x %	xxxxxxxx			
1	2	3	4	◂ Display zones	Specification	Evaluation
				Adjustment conditions	11111111	=> Page 35
			Lambda regulator before catalyst		-10.0...10.0 %	=> Page 45
		Coolant temperature			85...110 °C	=> Page 35
	Engine speed (idling speed):				640...930 rpm1)	=> Page 35

1) Up-to-date specifications:

=> Exhaust emissions test binder

Significance of 8-digit number block

Significance if display = 1								
1	2	3	4	5	6	7	8	Significance
							1	Coolant temperature above 80 °C
						1		Speed below 2000 rpm
					1			Throttle valve closed
				1				Lambda regulation OK.
			1					Idling switch closed
		1						Air conditioner compressor switched off
	1							Catalyst hot (over 300 °C)
1								No faults recognised by self-diagnosis

Evaluating display group 1, display zone 1 - Engine speed (idling speed)

Appears on display	Possible fault cause	Fault elimination
Less than specification	- Throttle valve control part sticking or defective - Air filter element heavily soiled	- Check throttle valve control part => Page 85 - Renew air filter element => Page 75
Greater than specification	- Throttle valve control part sticking or defective - Large amount of unmetered air (cannot be compensated for by the idling stabilisation)	- Interrogate fault memory, => Page 7 - Check intake air system for leaks => Page 110 - Check throttle valve control part => Page 85 - Perform idling check => Page 112

Evaluating display group 1, display zone 2 - Coolant temperature

Appears on display	Possible fault cause	Fault elimination

satelettronica

Less than 80 °C	- Engine too cold - Coolant temperature sender or wiring to engine control unit - Thermostat defective	- If necessary carry out test drive - Check coolant temperature sender =>Page 94 - Check thermostat => Repair group 19; Removing and installing parts of cooling system; Parts of cooling system engine side Parts of cooling system engine side
More than 110 °C	- Radiator soiled - Radiator fan not functioning - Thermostat defective - Coolant temperature sender or wiring to engine control unit	- Clean radiator - Check function - Check thermostat => Repair group 19; Removing and installing parts of cooling system; Parts of cooling system engine side Parts of cooling system engine side - Check coolant temperature sender =>Page 94

Display group 2 -Basic functions-

▪ Engine running at idling speed

Read measured value block 2 ⇒ ◂ Indicated on display

xxxx rpm	xxx.x %	x.x ms	xxx mbar	◂ Display zones	Specification	Evaluation
1	2	3	4	Intake manifold pressure	240...480 mbar	=> Page 36
				Injection period	2.0...5.0 ms	=> Page 36
				Engine load	10...20 %	=> Page 39
				Engine speed (idling speed):	640...930 rpm1)	=> Page 35

1) Up-to-date specifications:

=> Exhaust emissions test binder

Evaluating display group 2, display zone 3 - Injection period

Appears on display	Possible fault cause	Fault elimination
Less than 2.0 ms	- Large amount of fuel from the activated charcoal filter system - Incorrect injectors with greater throughput installed	- Check activated charcoal filter solenoid valve 1 => Page 21 , Final control diagnosis - Check injectors => Page 100 - Check injector part number: => Parts micro-fiche
More than 5.0 ms	- Increased engine load due to electric consumers, air conditioner, gear selected or P.A.S. on full lock - Incorrect injectors with smaller throughput installed	- Eliminate increased load (air conditioner, power assisted steering etc.) - Check injectors => Page 100 - Check injector part number: => Parts micro-fiche

Evaluating display group 2, display zone 4 - Intake manifold pressure

Appears on display	Possible fault cause	Fault elimination

Protected by copyright. Copying for private or commercial purposes, in any form or by any means, is not permitted unless authorised by Volkswagen AG. Volkswagen AG does not guarantee or accept any liability with respect to the correctness of information in this document. Copyright by Volkswagen AG.

satelettronica

Less than 240 mbar	- Large amount of unmetered air between intake manifold and air cleaner	- Rectify unmetered air
More than 480 mbar	- Gear selected (automatic gearbox) - Engine loaded due to ancillaries - Air filter element heavily soiled	- Place selector lever in P or N - Eliminate load (air conditioner, power assisted steering etc.) - Renew air filter element => Page 75

Display group 3 -Basic functions-

▪ Engine running at idling speed

Read measured value block 3 ⇒ ◂ Indicated on display

xxxx rpm xxx mbar xxx.x % xx.x°BTDC

1	2	3	4	◂ Display zones	Specification	Evaluation
				Ignition timing	0...10 ° BTDC	---
			Throttle valve angle (Potentiometer 1 -G187)		2...6 %	=> Page 40
		Intake manifold pressure			240...480 mbar	=> Page 36
	Engine speed (idling speed):				640...930 rpm1)	=> Page 35

1) Up-to-date specifications:

=> Exhaust emissions test binder

Display group 4 -Basic functions-

▪ Engine running at idling speed

Read measured value block 4 ⇒ ◂ Indicated on display

xxxx rpm xx.xxx V xxx.x °C xxx.x °C

1	2	3	4	◂ Display zones	Specification	Evaluation
				Intake air temperature	-48...143.0 °C	=>Page 38
			Coolant temperature		80...110 °C	=> Page 38
		Voltage supply for engine control unit			12.0...15.0 V	=> Page 37
	Engine speed (idling speed):				640...930 rpm1)	=> Page 35

1) Up-to-date specifications:

=> Exhaust emissions test binder

Note on display zone 3:

The engine control unit will use the intake air temperature as a replacement value for an engine start (start temperature - replacement value) as soon as there is a fault stored in the fault memory, which affects the coolant temperature sender (G62). The temperature then rises according to a model stored in the control unit. When the engine has reached normal working temperature a fixed replacement value will be displayed after a certain period. This fixed value is also dependent upon the intake air temperature.

Note on display zone 4:

The total temperature range is given as the specification. The displayed value must be above ambient temperature.

Evaluating display group 4, display zone 2 - Control unit voltage supply

Appears on display	Possible fault cause	Fault elimination

satelettronica

Less than 12.000 V	- Alternator defective, battery heavily discharged - Battery heavily charged shortly after starting due to high charging current and current consumers - Transfer resistance in the current supply or the engine control unit earth connection - Current draw when ignition is off	- Check alternator and battery voltage, charge battery: => Electrical system; Repair group 27 - Increase revs slightly for a few minutes and switch off current consumers - Check engine control unit voltage supply => Page 123 - Eliminate current draw
More than 15.000 V	- Voltage regulator on alternator defective - Excess voltage due to jump starting or quick charging unit	- Check voltage, replace regulator if necessary: => Electrical system; Repair group 27 - Interrogate fault memory => Page 7

Evaluating display group 4, display zone 3 - Coolant temperature

Appears on display	Possible fault cause	Fault elimination
Less than 80 °C	- Engine too cold - Coolant temperature sender or wiring to engine control unit - Thermostat defective	- If necessary carry out test drive - Check coolant temperature sender =>Page 94 - Check thermostat => Repair group 19; Removing and installing parts of cooling system: Parts of cooling system - engine side
Greater than 110 °C	- Radiator soiled - Radiator fan not functioning - Thermostat defective - Coolant temperature sender or wiring to engine control unit	- Clean radiator - Check function => Binder Electrical system - Check thermostat => Repair group 19; Removing and installing parts of cooling system: Parts of cooling system - engine side - Check coolant temperature sender =>Page 94
Constant -48.0 °C	- Wiring open circuit or short to positive	- Check coolant temperature sender =>Page 94
Constant 120.0 °C	- Short to earth	

Evaluating display group 4, display zone 4 - Intake air temperature

Appears on display	Possible fault cause	Fault elimination
Constant -48.0 °C	- Wiring open circuit or short to positive	- Check intake air temperature sender =>Page 90
Constant 143.0 °C	- Short to earth	

Display group 5 -Basic functions-						
▪ Engine running at idling speed						
Read measured value block 5 ⇒				◂ Indicated on display		
xxxx rpm	xxx.x %	xxx km/h	Text	◂ Display zones	Specification	Evaluation
1	2	3	4	Operating mode (idling, part throttle, enrichment, overrun)	Idling	---
				Road speed	0 km/h	---

satelettronica

	Engine load	10...20 %	=> Page 39
	Engine speed (idling speed):	640...930 rpm1)	=> Page 35

1) Up-to-date specifications:

=> Exhaust emissions test binder

Display group 6 -Basic function-						
▪ Engine running at idling speed						
Read measured value block 6			⇒	◂ Indicated on display		
xxxx rpm	xxx.x %	xxx.x °C	xx.x %			
1	2	3	4	◂ Display zones	Specification	Evaluation
				Elevation correction factor	-40.0...5.0 %	---
				Intake air temperature	-48...143.0 °C	=> Page 38
				Engine load	10...20 %	=> Page 39
				Engine speed (idling speed):	640...930 rpm1)	=> Page 35

1) Up-to-date specifications:

=> Exhaust emissions test binder

Note on display zone 3:

The total temperature range is given as the specification. The displayed value must be above ambient temperature.

9 - Evaluating measured value blocks, display groups 10...29 -Ignition-

9.1 - Evaluating measured value blocks, display groups 10...29 -Ignition-

Display group 10 -Ignition-						
▪ Engine running at idling speed						
Read measured value block 10			⇒	◂ Indicated on display		
xxxx rpm	xxx.x %	xxx.x %	xx.x°BTDC			
1	2	3	4	◂ Display zones	Specification	Evaluation
				Ignition timing	0...10 ° BTDC	---
				Throttle valve angle (Potentiometer 1 -G187)	2...6 %	=> Page 40
				Engine load	10...20 %	=> Page 39
				Engine speed (idling speed):	640...930 rpm1)	=> Page 35

1) Up-to-date specifications:

=> Exhaust emissions test binder

Evaluating display group 10, display zone 2 - Engine load

Appears on display	Possible fault cause	Fault elimination
Less than 10 %	- Lesser values can only occur when driving in overrun	

Protected by copyright. Copyright by Volkswagen AG. Volkswagen AG does not guarantee the accuracy, completeness or timeliness of the information. Copying for private or commercial purposes, in part or in whole, is not permitted unless authorised by Volkswagen AG.
satelettronica

More than 20 %	- Rough idling (not running on all cylinders) - Electric consumers switched on - Steering wheel at full lock	- Injectors or spark plugs defective - Switch off electric consumers - Set steering wheel to centre position

Evaluating display group 10, display zone 3 - Throttle valve angle

Appears on display	Possible fault cause	Fault elimination
More than 6 %	- Engine control unit not adapted to throttle valve control part - Throttle valve potentiometer in throttle valve control part defective - Throttle valve sticking	- Adapt engine control unit to throttle valve control part => Page 128 - Check throttle valve control part => Page 85 - Eliminate cause

Protected by copyright. Copying for private or commercial purposes, in part or in whole, is not permitted unless authorised by Volkswagen AG. Volkswagen AG does not guarantee or accept any liability with respect to the correctness of information in this document. Copyright by Volkswagen AG.

Display group14 -Ignition- Misfire recognition total						
▪ Whilst driving						
Read measured value block 14			⇒	◂ Indicated on display		
xxxx rpm	xx.x %	xxx	Text			
1	2	3	4	◂ Display zones	Specification	Evaluation
				Misfire recognition (activated, blocked)	activated	---
			Misfire total		0	=> Page 40
		Engine load			12.0...100.0 %	---
	Engine speed				640...5700 rpm	---

Evaluating display group 14, display zone 3 - Total number of misfires

Appears on display	Possible fault cause	Fault elimination
More than 0	- Spark plug defective - Spark plug connector defective - Ignition coil defective	- Check spark plugs and ignition/HT wiring with connector => Page 147
	- Injector defective	- Check injectors => Page 100
	- Exhaust gas recirculation valve sticking	- Check exhaust gas recirculation valve => Page 21 , Final control diagnosis

Display group 15 -Ignition- Misfire recognition Cyl. 1 to Cyl. 3						
▪ Whilst driving						
Read measured value block 15			⇒	◂ Indicated on display		
xxx	xxx	xxx	Text			
1	2	3	4	◂ Display zones	Specification	Evaluation
				Misfire recognition (activated, blocked)	activated	---
			Misfire Cyl. 3		0	=> Page 41
		Misfire Cyl. 2			0	=> Page 41
	Misfire Cyl. 1				0	=> Page 41

Display group 16 -Ignition- misfire recognition Cyl. 4
▪ Whilst driving

satelettronica

Read measured value block 16			⇒	◂ Indicated on display		
xxx	---	---	Text			
1	2	3	4	◂ Display zones	Specification	Evaluation
				Misfire recognition (activated, blocked)	activated	---
	Misfire Cyl. 4				0	=> Page 41

Evaluating display group 15 display zones 1 to 3 or display group 16 display zone 1 - Misfire recognition Cyl. 1 to Cyl. 4

Appears on display	Possible fault cause	Fault elimination
More than 0	- Spark plug defective - Spark plug connector defective - Ignition coil defective	- Check spark plugs and ignition/HT wiring with connector => Page 147
	- Injector defective	- Check injectors => Page 100

Display group 22 -Ignition- Knock control						
▪ Whilst driving						
Read measured value block 22			⇒	◂ Indicated on display		
xxxx rpm	x.xx %	xx.x °CA	xx.x °CA			
1	2	3	4	◂ Display zones	Specification	Evaluation
				Cyl. No. 2 retardation of ignition timing by knock control	0...14 °CA	=> Page 41
			Cyl. No. 1 retardation of ignition timing by knock control		0...14 °CA	=> Page 41
		Engine load			15...175 %	---
	Engine speed				640...5700 rpm	---

Display group 23 -Ignition- Knock control						
▪ Whilst driving						
Read measured value block 23			⇒	◂ Indicated on display		
xxxx rpm	x.xx %	xx.x °CA	xx.x °CA			
1	2	3	4	◂ Display zones	Specification	Evaluation
				Cyl. No. 4 retardation of ignition timing by knock control	0...14 °CA	=> Page 41
			Cyl. No. 3 retardation of ignition timing by knock control		0...14 °CA	=> Page 41
		Engine load			15...175 %	---
	Engine speed				640...5700 rpm	---

Evaluating display groups 22/23, display zones 3 and 4 - Retardation of ignition

Appears on display	Possible fault cause	Fault elimination
All cylinders 14 °CA	- Knock sensor defective	- Check knock sensor => Page 150
	- Connector corroded	

Protected by copyright. Copying or publication in part or whole is not permitted unless authorised by Volkswagen AG. Volkswagen AG does not guarantee or accept any liability with respect to the correctness of information in this document. Copyright by Volkswagen AG.
spare electronica

	- Knock sensor incorrectly tightened	- Loosen knock sensor and tighten to 20 Nm
	- Ancillary components on engine loose	- Tighten ancillary components
	- Poor fuel quality	- Change type of fuel
One cylinder deviates greatly from the others	- Connector corroded	- Check knock sensor => Page 150
	- Engine damaged	- Check compression pressures: => Repair group 15; Removing and installing cylinder head; Checking compression pressure Checking compression pressure
	- Ancillary components on engine loose	- Tighten ancillary components

Display group 28 -Ignition- knock control						
▪ Whilst driving						
Read measured value block 28			⇒	◂ Indicated on display		
xxxx rpm	xx.x %	xxx.x °C	Text			
1	2	3	4	◂ Display zones	Specification	Evaluation
				Knock sensor test result (Test On / Test OFF / Sys. OK. / Sys. n.OK.	Sys. OK.	---
			Coolant temperature		80.0...110.0 °C	=> Page 38
		Engine load			50...70 %	---
	Engine speed				2000...4000 rpm	---

10 - Evaluating measured value blocks, display groups 30...49 -Lambda regulation-

10.1 - Evaluating measured value blocks, display groups 30...49 -Lambda regulation-

Display group 30 -Lambda regulation-						
▪ Engine running at idling speed						
Read measured value block 30			⇒	◂ Indicated on display		
xxx	xxx	---	---			
1	2	3	4	◂ Display zones	Specification	Evaluation
		Lambda regulation status after catalyst			110	=> Page 43
	Lambda regulation status before catalyst				111	=> Page 43

Note on display zone 2:

The 3rd display position is not set to 1 until in part throttle range.

satelettronica

Protected by copyright. Copyright by Volkswagen AG. Volkswagen AG does not guarantee or accept any liability with respect to the correctness of information in this document. Copyright by Volkswagen AG. Reproduction in whole or in part is not permitted unless authorised by Volkswagen AG. Volkswagen AG does not guarantee or accept any liability with respect to the correctness of information in this document. Copyright by Volkswagen AG.

Significance of figures in 3-digit number block, display zones 1 and 2 - status of Lambda regulation before and after catalyst

Significance if display = 1			
1	2	3	
		1	Lambda regulation active
	1		Lambda probe operationally ready
1			Lambda probe heating on

Display group 32 -Lambda regulation- Lambda learnt values						
▪ Engine running at idling speed						
Read measured value block 32			⇒	◂ Indicated on display		
xx.x %	xx.x %	---	---			
1	2	3	4	◂ Display zones	Specification	Evaluation
		Lambda learnt value at part load (multiplicative) before catalyst			-10.0...10.0 %	=> Page 43
	Lambda learnt value at idling speed (additive) before catalyst				-10.0...10.0 %	=> Page 43

Notes on display zones 1 and 2:

Low values indicate that the engine is running too rich and therefore the Lambda regulation is leaning the mixture.

- High values indicate that the engine is running too lean and therefore the Lambda regulation enriches the mixture.
- If there is no voltage supply to the control unit all the values learnt will be cancelled.
- add = additive - The effects of the fault (e.g. unmetered air) will reduce as the engine speed increases. The injection period will be modified by a fixed amount for additive learnt values. This amount is not dependent upon the basic injection period.
- mul = multiplicative - The effects of the fault (e.g. faulty injector) will increase as the engine speed increases. A multiplicative learnt value is a proportional change to the injection period. This change is dependent on the basic injection period.
- Learning conditions for part load: coolant temperature min. 75 °C, intake air temperature max. 90 °C

Evaluating display zone 32, display zones 1 and 2 - Lambda learnt values

Appears on display	Possible fault cause	Fault elimination
Low Lambda learnt values	- Low learnt values at idling but with normal learnt values at part throttle: possible oil dilution (high level of fuel in oil)	- Disappears after motorway drive or oil change
	- Injector leaking	- Check injector =>Page 100
	- Fuel pressure too high	- Check fuel pressure regulator and holding pressure => Page 107
	- Activated charcoal filter solenoid valve 1 permanently open	- Check activated charcoal filter solenoid valve 1 => Page 21 , Final control diagnosis
	- Lambda probe heating defective or Lambda probe soiled	- Check Lambda probe heating before catalyst =>Page 80

Appears on display	Possible fault cause	Fault elimination

satelettronica

High Lambda learnt values	- High learnt values at idling speed, not so high learnt values at part throttle: possible unmetered air in area of intake manifold	- Check intake air system for leaks =>Page 110
	- Unmetered air between air filter and throttle valve	- Eliminate cause
	- Injector blocked	- Check quantity injected rate =>Page 100
	- Fuel pressure too low	- Check fuel pressure regulator and holding pressure => Page 107
	- Unmetered air at exhaust manifold gasket	
	- Lambda probe heating defective or Lambda probe soiled	- Check Lambda probe heating before catalyst =>Page 80

Display group 33 -Lambda regulation- Lambda regulation values						
▪ Engine running at idling speed						
Read measured value block 33			⇒	◂ Indicated on display		
xx.x %	x.xxx V	---	---			
1	2	3	4	◂ Display zones	Specification	Evaluation
		Lambda probe voltage, Lambda probe before catalyst			0.000...1.000 V	---
	Lambda regulator before catalyst				-10.0...10.0 %	=> Page 45

Notes on display zone 1:

- The display must fluctuate around 0. If constant 0 is displayed, the Lambda regulation has switched from regulation to control, because there is a fault in the Lambda regulation. Interrogate fault memory => Page 7 .

Notes on display zone 2:

- The voltage signal "rich mixture (low level of residual oxygen)" is approx. 0.7...1.0 V.
- The voltage signal "lean mixture (high level of residual oxygen)" is approx. 0.0...0.3 V.
- When signal changes from "rich" to "lean" and back again (λ = 1.0), a voltage drop or jump between 0.7...1.0 V and 0.0...0.3 V will occur.
- Due to the linear characteristic of Lambda regulation, the ideal mixture corresponding to λ = 1.0 cannot be held constantly. Regulation can constantly alternate between the states "target lean" and "target rich".

Protected by copyright. Copying for private or commercial purposes, in part or in whole, is not permitted unless authorised by Volkswagen AG. Volkswagen AG does not guarantee or accept any liability with respect to the correctness of information in this document. Copyright by Volkswagen AG.
satelettronica

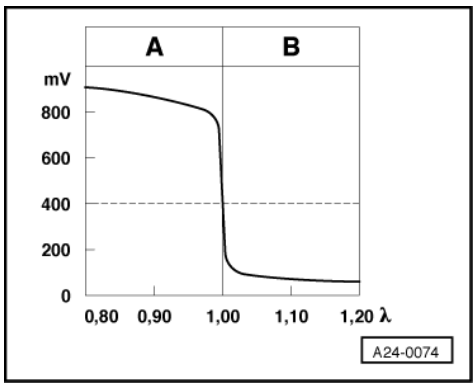

-> Lambda probe voltage Uλ in mV

A: High Lambda probe voltage

- Rich mixture (excess of fuel or shortage of air)
- Higher CO value

B: Low Lambda probe voltage

- Lean mixture (shortage of fuel or excess air)
- Lower CO value

Evaluating display group 33, display zone 1 - Lambda regulator before catalyst

Appears on display	Possible fault cause	Fault elimination
Outside tolerance range	- Minus range: Mixture too rich, Lambda control weakens mixture - Positive range: Mixture too lean, Lambda control enriches mixture	- Wait 30 seconds until the display has stabilised
	- Unmetered air	- Check intake system for leaks => Page 110
	- Injector defective	- Check injection rate => Page 100
	- Lambda learnt value on limit	- Check Lambda learnt value in display group 32

Display group 34 -Lambda regulation- Lambda probe diagnosis before catalyst (checking ageing via amplitude duration monitoring)

- Rev up briefly over 5,000 rpm twice
- Vehicle stationary, engine running at raised speed
- Control unit in mode 04-Basic settings

Read measured value block 34 ⇒ ◂ Indicated on display

xxxx rpm	xxx.x °C	xx.xx s	Text	◂ Display zones	Specification	Evaluation
1	2	3	4			
				Result of Lambda probe before catalyst ageing check (Test OFF / test ON / B1-P1 OK / B1-P1 n.OK)	B1-P1 OK	---
			Cycle duration Lambda probe before catalyst		max. 1.0 s	---
		Catalyst temperature			---	---
	Engine speed				1500...3900 rpm	---

satelettronica

Note on display zone 3 and 4:

The cycle duration of the lambda probe indicates the time between two voltage pulses (e.g. rich - lean - rich). It is therefore a means of evaluating lambda probe ageing (i.e. the condition of the lambda probe). If the indicated cycle duration is exceeded, "B1-P1 n. OK" will appear in display zone 4.

Display group 36 -Lambda regulation- Operational readiness of probe after catalyst						
▪ Control unit in mode 04-Basic settings						
▪ Vehicle stationary, engine running at raised speed						
Read measured value block 36			⇒	◂ Indicated on display		
x.xxx V	Text					
1	2	3	4	◂ Display zones	Specification	Evaluation
		Check Lambda probe after catalyst (Test OFF/ Test ON/B1-P2 OK / B1-P2 n.OK)			B1-P2 OK	---
	Lambda probe voltage after catalyst				0.000...1.000 V	=> Page 46

Evaluating display group 36, display zone 1 - Lambda probe voltage, Lambda probe after catalyst

Appears on display	Possible fault cause	Fault elimination
Constant 1.100 V	- Short to positive via: - Lambda probe, probe wiring, earth wiring, engine control unit	- Check Lambda probe 2 basic voltage => Page 118
Constant between 0.400...0.500 V	- Open circuit via: - Lambda probe, probe wiring, earth wiring, engine control unit	
Constant 0.000 V	- Short to earth via: - Lambda probe, probe wiring, earth wiring, engine control unit	

Display group 37 -Lambda regulation- Lambda probes						
▪ Vehicle stationary, engine running at increased idling speed						
▪ Control unit in mode 04-Basic settings						
Read measured value block 37			⇒	◂ Indicated on display		
xxx %	x.xxx V	xxx.xxx	Text			
1	2	3	4	◂ Display zones	Specification	Evaluation
				Test of Lambda probes (Test ON / OFF / Syst. OK / n.OK)	Syst. OK	
			Not for Service		---	---
		Lambda probe voltage Lambda probe after catalyst			0.000...1.000 V	=> Page 46
	Engine load				10.0...20.0 %	=> Page 39

Display group 41 -Lambda regulation- Lambda probe heating						
▪ Engine running at idling speed						
Read measured value block 41			⇒	◂ Indicated on display		
---	Text	---	Text			
1	2	3	4	◂ Display zones	Specification	Evaluation

satelettronica
Volkswagen AG. Volkswagen AG does not guarantee or accept any liability with respect to the correctness of information in this document. Copyright by Volkswagen AG.
Reproduction not permitted. Protected by copyright. Copyright by Volkswagen AG. Volkswagen AG does not guarantee or accept any liability with respect to the correctness of information in this document. Copyright by Volkswagen AG.

			Lambda probe heating after catalyst	Htg.aC.ON Htg.aC.OFF	---
		Lambda probe heating before catalyst		Htg.bC.ON Htg.bC.OFF	---

Note:

The Lambda probe heating may be switched ON or OFF depending on the operating conditions of the engine, therefore the display in display zone 2 or 4 may show "Htg.b(a)C.ON" or alternating from "Htg.b(a)C.ON" to Htg.b(a)C.OFF".

Display group 46 -Lambda regulation- Catalyst diagnosis (conversion test)						
▪ Control unit in mode 04-Basic setting ▪ Vehicle stationary, engine running at raised speed						
Read measured value block 46 ⇒				◂ Indicated on display		
xxxx rpm	xxxx °C	xx %	Text			
1	2	3	4	◂ Display zones	Specification	Evaluation
				Result of catalyst conversion test (Test OFF / test ON / Cat B1 OK/Cat B1 n.OK)	Cat B1 OK	---
			Catalyst conversion measurement		at least 50 %	---
		Catalyst temperature			at least 300.0 °C	---
	Engine speed				1500...3900 rpm	---

Note to display group 46:

- Prerequisite for the conversion check:
  No entries in fault memory, engine running at idling speed, coolant temperature 60...120 °C, Lambda regulation active and stable.

Display group 99 -Lambda regulation- Lambda regulation operating condition						
▪ Engine running at idling speed ▪ Control unit in mode 04-Basic setting, Lambda regulation off ▪ Control unit in mode 08-Read measured value block, Lambda regulation on						
Read measured value block 99 ⇒				◂ Indicated on display		
xxxx rpm	xxx.x °C	xx.x %	Text			
1	2	3	4	◂ Display zones	Specification	Evaluation
				Lambda regulation operating mode	λ-Reg. OFF or λ-Reg. ON	---
			Lambda regulator before catalyst		-10.0...10.0 %	=> Page 45
		Coolant temperature			80...110 °C	=> Page 38
	Engine speed (idling speed):				640...930 rpm1)	=> Page 35

1) Up-to-date specifications:

=> Exhaust emissions test binder

Notes on display zone 4:

- For a defined fault finding the Lambda regulation is switched off when selecting display group 99 under "Basic setting" or switched on under "Read measured value block".
  When the function 04 "Basic setting" is exited the Lambda regulation is automatically active again.

satelettronica

- It is possible to switch between the function 04 "Basic setting" and the function 08 "Read measured value block" by pressing the keys 4 and 8 on V.A.G 1551/1552.

11 - Evaluating measured value blocks, display groups 50...69 -Speed regulation-

11.1 - Evaluating measured value blocks, display groups 50...69 -Speed regulation-

Display group 50 -Speed regulation- Operating condition						
▪ Engine running at idling speed						
Read measured value block 50 ⇒				◂ Indicated on display		
xxxx rpm	xxxx rpm	Text	Text			
1	2	3	4	◂ Display zones	Specification	Evaluation
				Air conditioner compressor operating mode ON/OFF	ON or OFF	---
				Air conditioner operating mode	ON or OFF	---
				Engine speed (idling speed specification):	790 rpm	---
				Engine speed (idling speed):	640...930 rpm1)	=> Page 35

1) Up-to-date specifications:

=> Exhaust emissions test binder

Note on display zone 2:

The specified engine speed from engine control unit (calculated in control unit) is displayed. In exceptional cases the idling speed can be adapted => Page 114 . The idling speed figures with gear selected are then automatically modified.

Note on display zone 3 and 4:

- "OFF" is always displayed on vehicles without air conditioner.
- Checking signal from and to air conditioner compressor =>Page 133

Display group 54 -Speed regulation-						
▪ Whilst driving						
Read measured value block 54 ⇒				◂ Indicated on display		
xxxx rpm	Text	xxx.x %	xxx.x %			
1	2	3	4	◂ Display zones	Specification	Evaluation
				Throttle valve angle (Potentiometer 1 -G187)	0.0...100.0%	---
				Accelerator pedal position sender 1 -G79	0.0...100.0%	---
				Operating mode: Idling, part throttle, enrichment, overrun, full throttle	---	---
				Engine speed	640...5700 rpm	---

Note on display zone 1:

Tester shuts down above 5700 rpm.

satelettronica

Note on display zone 2:

The operating mode is displayed according to engine speed or load. At a higher engine speed, "overrun" is displayed when throttle valve is closed only up to 1450 rpm, and then again at idle.

Display group 55 -Speed regulation- Idling stabilisation						
▪ Engine running at idling speed						
Read measured value block 55			⇒	◂ Indicated on display		
xxxx rpm	xx.x %	xx.x %	xxxxx			
1	2	3	4	◂ Display zones	Specification	Evaluation
				Operating condition	xxxx	=> Page 49
				Idling regulator learnt value Air conditioner on Air conditioner off	-6.0...8.0 % -3.0...8.0 %	---
				Idling regulator	-10...0 %	---
				Engine speed (idling speed):	640...930 rpm1)	=> Page 35

1) Up-to-date specifications:

=> Exhaust emissions test binder

Note on display zone 3:

Displayed is the amount that the idling speed stabilisation has moved away from the prescribed average. For a new engine the values lie in the positive range, because of the higher friction and in the negative range with an engine that has run-in.

Display group 56 -Speed regulation- Idling speed stabilisation						
▪ Engine running at idling speed						
Read measured value block 56			⇒	◂ Indicated on display		
xxxx rpm	xxxx rpm	xx.xx Nm	xxxxx			
1	2	3	4	◂ Display zones	Specification	Evaluation
				Operating mode	xxxxx	=> Page 49
				Idling regulator	-10...0 Nm	---
				Engine speed (idling speed specification):	790 rpm	---
				Engine speed (idling speed):	640...930 rpm1)	=> Page 35

1) Up-to-date specifications:

=> Exhaust emissions test binder

Significance of figures in 5-digit number block, display zone 4 - operating modes

Significance if display = 1					
1	2	3	4	5	Significance
				1	Air conditioner compressor switched on
			1		Driving range (gear) selected
		1			Air conditioning system switched on
	x				Not relevant
x					Not relevant

satelettronica
Protected by copyright. Copyright by Volkswagen AG. Volkswagen AG does not guarantee or accept any liability with respect to the correctness of information in this document. Copying for private or commercial purposes, in part or in whole, is not permitted unless authorised by Volkswagen AG.

Display group 60 -Speed regulation- Adaption of electronic accelerator system						
▪ Ignition on, engine not running						
▪ Control unit in mode 04 basic setting						
Read measured value block 60 ⇒				◂ Indicated on display		
xx %	xx %	x	Text			
1	2	3	4	◂ Display zones	Specification	Evaluation
				Adaption condition (ADP runs, ADP OK or ADP ERROR)	ADP OK	---
			Learning step counter		0...12	---
		Throttle valve angle (potentiometer 2 -G188)			10...85 %	---
	Throttle valve angle (potentiometer 1 -G187)				10...85 %	---

Note on display group 60:

- Matching the throttle valve control part is performed with ignition switched on.
- Engine control unit is adapted to throttle valve control unit when selecting display group 60 under function 04 "Basic setting". This adaption must always be carried out when another throttle valve control part (or another complete engine) or another engine control unit is fitted.
- If the voltage supply is interrupted (battery disconnected) the adaption (matching) must be carried out again => Page 125 Procedure after voltage supply open circuit.
- The counter in display zone 3 counts up to 12 during the adaption (otherwise, fault entered in fault memory.
- The basic settings are completed first when the counter in display zone 3 reaches step 12.

Display group 61 -Speed regulation- Electronic accelerator system						
▪ Whilst driving						
Read measured value block 61 ⇒				◂ Indicated on display		
xxxx rpm	---	xxx.x %	xxxxx			
1	2	3	4	◂ Display zones	Specification	Evaluation
				Operating mode	xxxxx	=> Page 49
			Throttle valve angle (potentiometer 1 -G187)		0...100 %	---
		Voltage supply for engine control unit			12.0...15.0 V	=> Page 37
	Engine speed				640...5700 rpm	---

Display group 62 -Speed regulation- Electronic accelerator system						
▪ Ignition on, engine not running						
Read measured value block 62 ⇒				◂ Indicated on display		
xx %	xx %	xx %	xx %			
1	2	3	4	◂ Display zones	Specification	Evaluation
				Accelerator pedal position sender 2 -G185	0...100 %	---
			Accelerator pedal position sender 1 -G79		0...100 %	---
		Throttle valve angle (potentiometer 2 -G188)			3...97 %	---
	Throttle valve angle (potentiometer 1 -G187)				3...97 %	---

Reproduced by copyright permission of Volkswagen AG. Volkswagen AG does not guarantee or accept any liability with respect to the correctness of information in this document. Copyright by Volkswagen AG.
satelettronica

12 - Evaluating measured value blocks, display groups 70...75 -Exhaust gas recirculation-

12.1 - Evaluating measured value blocks, display groups 70...75 -Exhaust gas recirculation-

Display group 70 -Reducing emissions- Activated charcoal filter system diagnosis (tank breathing system)						
▪ Engine running at idling speed ▪ Coolant temperature at least 80.0 °C ▪ Control unit in mode 04-Basic settings						
Read measured value block 70 ⇒				◂ Indicated on display		
xx.x %	xx.x %	xxx mbar	Text			
1	2	3	4	◂ Display zones	Specification	Evaluation
				Result of activated charcoal filter diagnosis (Test OFF / test ON / TVV OK / TVV n.OK)	TVV OK	---
				Intake manifold pressure	240...480 mbar	---
				Result of current diagnosis	>30%	---
				Degree of opening	13...24%	---

Note:

TVV means fuel tank venting valve (activated charcoal filter system solenoid valve 1).

Notes on display zone 1:

During the diagnosis the display fluctuates approx. 6 % between 13...25 %.

Display group 74 -Reducing emissions- EGR-position adaption						
▪ Ignition on, engine not running ▪ Control unit in mode 04 basic setting						
Read measured value block 74 ⇒				◂ Indicated on display		
x.x V	x.x V	x.x V	Text			
1	2	3	4	◂ Display zones	Specification	Evaluation
				Adaption condition (ADP runs, ADP OK or ADP ERROR)	ADP OK	---
				Current potentiometer voltage value	0.3...4.6 V	---
				100% position	2.9...4.6 V	---
				0 position (basic setting)	0.3...1.3 V	---

Notes on display group 74:

- Adaption of exhaust gas recirculation valve takes place when ignition is switched on.
- When selecting function 04 "basic settings" of display group 74, the engine control unit is adapted to the exhaust gas recirculation valve. This process must be carried out if another exhaust gas recirculation valve (or a complete engine) or another engine control unit has been fitted.

Display group 75 -Exhaust gas recirculation						
▪ Engine running at idling speed						
Read measured value block 75 ⇒				◂ Indicated on display		
xxxx rpm	xxx mbar		Text			
1	2	3	4	◂ Display zones	Specification	Evaluation

satelettronica
Protected by copyright. Copyright by Volkswagen AG. Volkswagen AG does not guarantee or accept any liability with respect to the correctness of information in this document. Copying for private or commercial purposes, in part or in whole, is not permitted unless authorised by Volkswagen AG.

			Result test on / test off / Sys. OK / Sys. n.OK	Sys. OK	---
		Intake manifold pressure		240...480 mbar	=> Page 36
	Engine speed (idling speed):			640...930 rpm1)	=> Page 35

1) Up-to-date specifications:

=> Exhaust emissions test binder

13 - Evaluating measured value blocks, display group 100 -Readiness code-

13.1 - Evaluating measured value blocks, display group 100 -Readiness code-

Display group 100 -Readiness code-						
▪ Engine running at idling speed						
Read measured value block 100			⇒	◂ Indicated on display		
xxxxxxxx	xxx.x °C	xxx.x s	xxxxxxxx			
1	2	3	4	◂ Display zones	Specification	Evaluation
				Diagnosis status	---	---
			Period since last engine start		---	---
		Coolant temperature			80.0...110.0 °C	=> Page 38
	Readiness code				00000000	=> Page 52

Significance of figures in 8-digit number block, display zone 1 - Readiness code

The readiness code is generated only when all display zones show 0								
1	2	3	4	5	6	7	8	Diagnostic function
							0	Catalyst
						0		Always "0"
					0			Activated charcoal filter system (tank venting system)
				0				Always "0"
			0					Always "0"
		0						Lambda probes
	0							Lambda probe heating
0								Exhaust gas recirculation system

14 - Evaluating measured value blocks, display groups 120...129 - Communication-

14.1 - Evaluating measured value blocks, display groups 120...129 -Communication-

Display group 125 -Communication -data bus messages-		
▪ Engine running at idling speed		
Read measured value block 125	⇒	◂ Indicated on display

Protected by copyright. Copying for private or commercial purposes, in part or whole, is not permitted unless authorised by Volkswagen AG. Volkswagen AG does not guarantee or accept any liability with respect to the correctness of information in this document. Copyright by Volkswagen AG.
satelettronica

Text 1	Text 2	Text 3	Text 4	◂ Display zones	Specification	Evaluation
				Airbag status	Airbag 1	---
				Combi status	Combi 1	---
				Gearbox status	Gear. 1	---
				ABS status	ABS 1	---

Note on display group 125:

Specification = 1; Control units with active data bus are displayed.

Protected by copyright. Copying for private or commercial purposes, in part or in whole, is not permitted unless authorised by Volkswagen AG. Volkswagen AG does not guarantee or accept any liability with respect to the correctness of information in this document. Copyright by Volkswagen AG.

satelettronica

24 - Mixture preparation, Injection

1 - Servicing injection system

1.1 - Servicing injection system

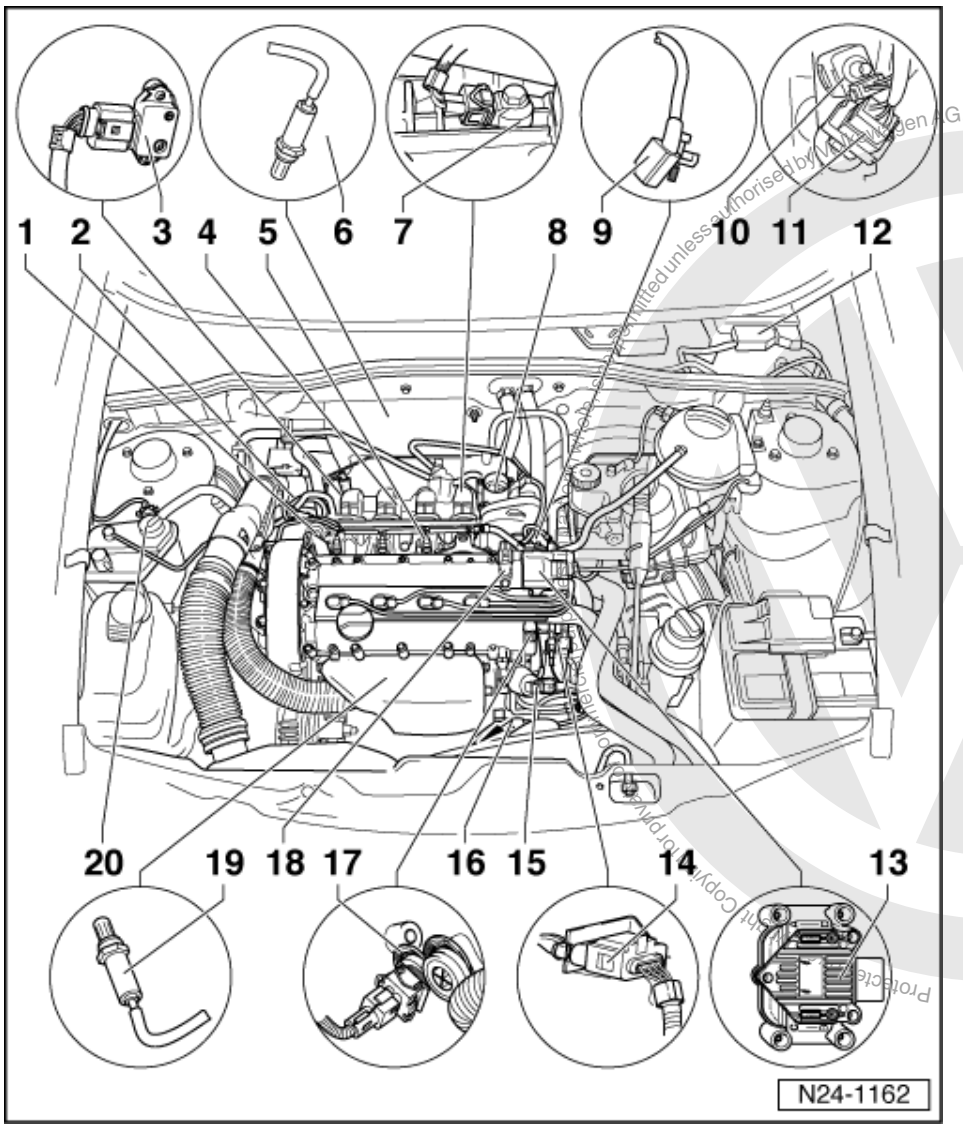

1.2 - Fitting locations overview

1 Fuel pressure regulator

2 Connector
- For Lambda probe 2 after catalyst (G130) and Lambda probe heating (Z29)
- Black, 4-pin
- Contacts 3 and 4 gold plated

3 Intake manifold pressure sender (G71) with intake air temperature sender (G42)

4 Intake manifold

5 Injector (N30...N33)

Protected by Copyright. Copying for private or commercial purposes, in part or in whole, is not permitted unless authorised by Volkswagen AG. Volkswagen AG does not guarantee or accept any liability with respect to the correctness of information in this document. Copyright by Volkswagen AG.
satelettronica

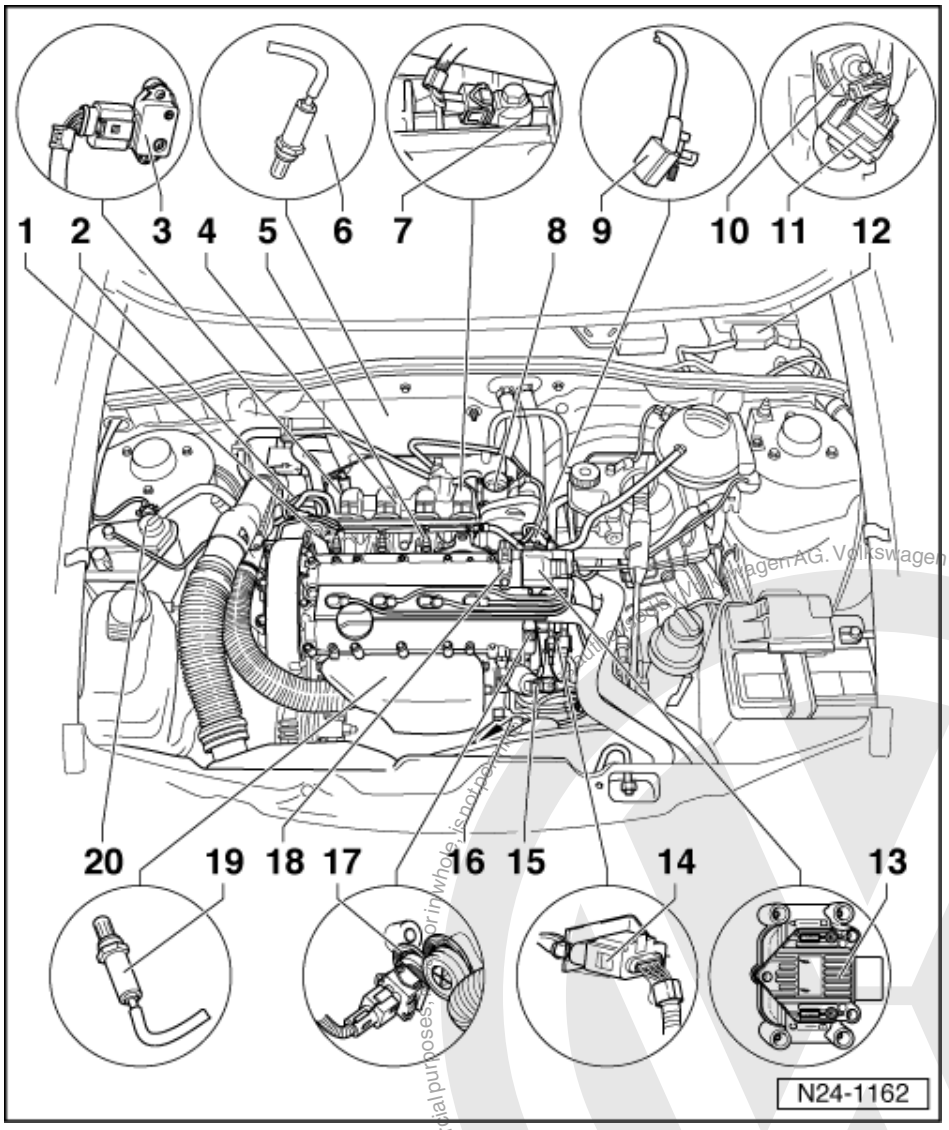

6 Lambda probe 2 after catalyst (G130), 50 Nm
- Grease only the threads with "G 052 112 A3"; "G 052 112 A3" must not get into the slots on the probe body
- Remove and install with ring spanner 3337

7 Knock sensor 1 (G61)
- Fitting location: cylinder block intake side
- => Page 142 , item 6

8 Throttle valve control part (J338)

9 Engine speed sender (G28)
- Fitting location: cylinder block intake side

10 Brake pedal switch (F47)
- In footwell on brake pedal
- Checking => Page 134

Protected by copyright. Copyright by Volkswagen AG.
Volkswagen AG does not guarantee or accept any liability with respect to the correctness of information in this document. Copyright by Volkswagen AG.
satelettronica

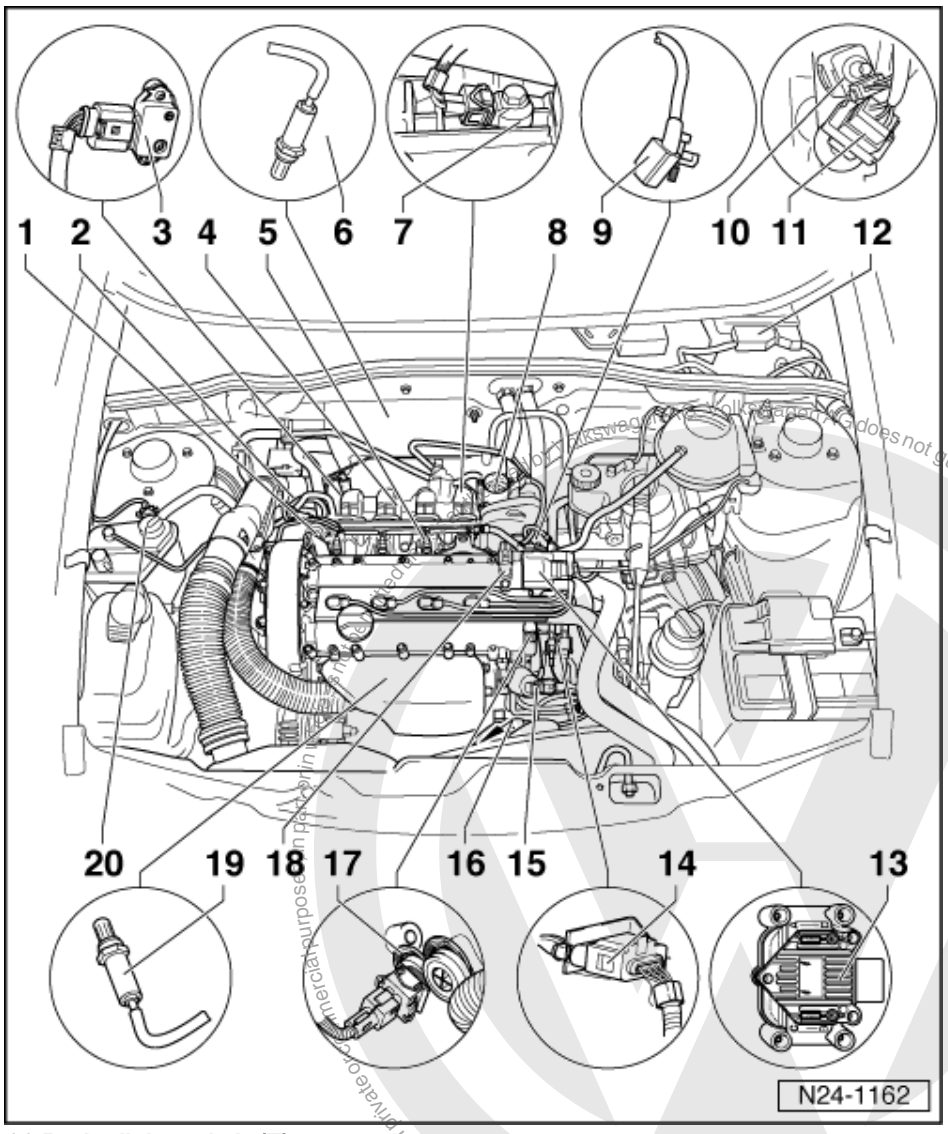

11 Brake light switch (F)
- In footwell on brake pedal
- Checking => Page 134

12 Engine control unit
(4LV injection system control unit -J537)

13 Ignition transformer (N152)
- With ignition cable identification, do not interchange
- => Page 141 , item 2

14 3 pin connector
- Black
- For engine speed sender (G28)

15 Exhaust gas recirculation valve (N18) with potentiometer for exhaust gas recirculation (G 212)

=> Repair group 26; Exhaust gas recirculation system; Servicing parts of the exhaust gas recirculation system
Exhaust gas recirculation system Servicing parts of the exhaust gas recirculation system

Protected by copyright. Copyright for private or commercial purposes in particular under criminal law is retained by Volkswagen AG. Volkswagen AG does not guarantee or accept any liability with respect to the correctness of information in this document. Copyright by Volkswagen AG.
satelettronica

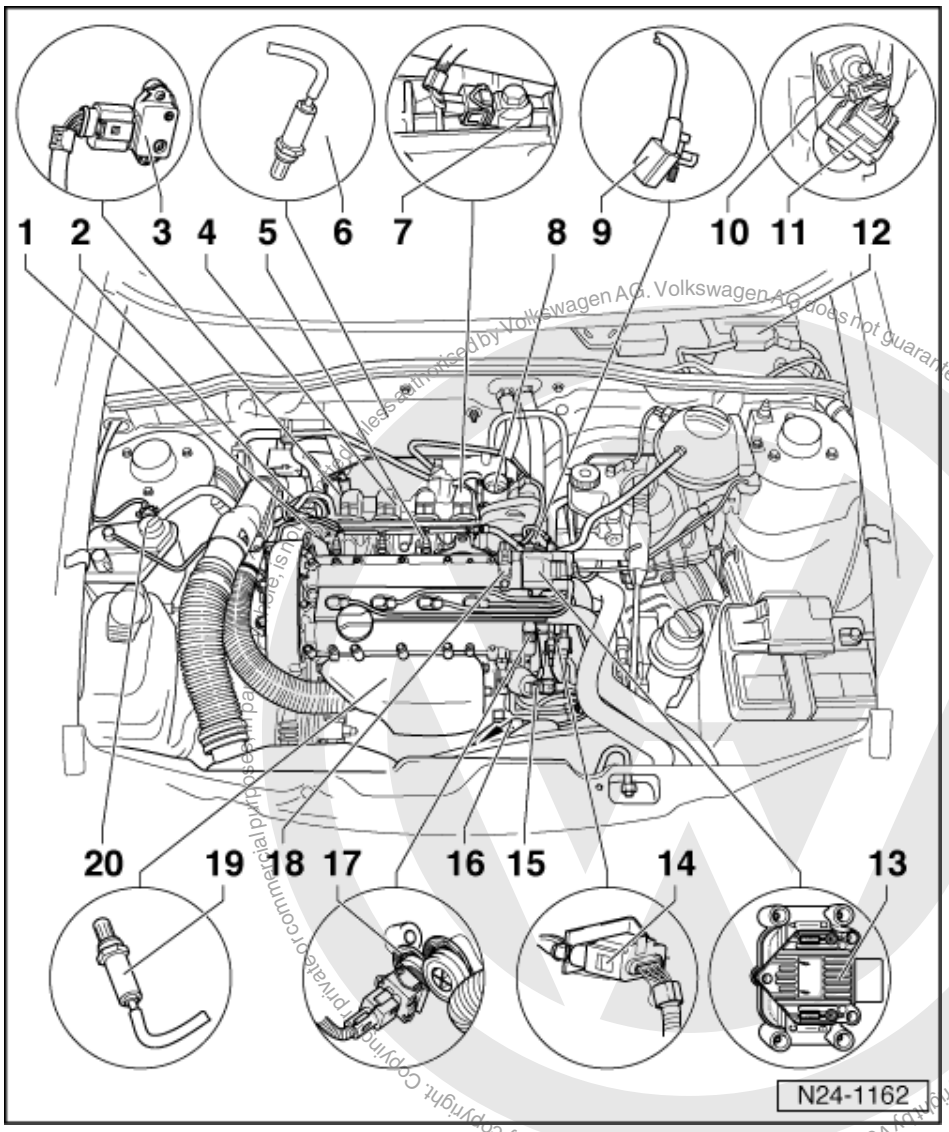

Protected by copyright. Copyright by Volkswagen AG.
Copyrighted by Volkswagen AG. Volkswagen AG does not guarantee or accept any liability with respect to the correctness of information in this document.
Copyrighted by Volkswagen AG. Unauthorised use is prohibited. Copyright. Copying for private or commercial purposes, in any form and by any means, is only permitted with the express written consent of Volkswagen AG.
satelettronica

16 4- and 6-pin connector
- Black
- For Lambda probe and Lambda probe heating before catalyst

17 Coolant temperature sender (G62)
- Blue
- With coolant temperature gauge sender (G2)

18 Hall sender (G40)
- => Page 143 , item 9

19 Lambda probe 1 before catalyst (G39), 50Nm
- Fitting location: exhaust manifold

20 Activated charcoal filter solenoid valve 1 (N80)
- Activated charcoal filter system

=> Repair group 20; Removing and installing parts of the fuel supply system; Servicing parts of the activated charcoal filter system Removing and installing parts of the fuel supply system Servicing parts of the activated charcoal filter system

1.3 - General notes on injection

Servicing ignition part:

=> Repair group 28

- The engine control unit is equipped with self-diagnosis. Before carrying out repairs and fault finding the fault memory must be interrogated. Also the vacuum hoses and connections must be checked (unmetered air).
- Fuel hoses in engine compartment must only be secured with spring type clips. The use of clamp or screw type clips is not permissible.
- Disconnecting and connecting the battery must only be done with the ignition switched off, otherwise the engine control unit could be damaged.
- Components marked with * are checked via the self diagnosis
  => Page 7 , interrogating and erasing fault memory.
- Components marked with **can be checked with the final control diagnosis => Page 21 .
- For trouble-free operation of the electrical components, a voltage of at least 11.5 V is necessary.
- Do not use sealants containing silicone. Particles of silicone drawn into the engine, will not be burnt in the engine and damage the Lambda probe.
- If the engine starts, runs for a short period and then stops, after fault finding, repairs or component tests, then the fault may lie with the immobilizer which is blocking the engine control unit. The fault memory must be interrogated and if necessary the control unit matched => Page 130 .
- During some checks it is possible that the control unit will recognise and store a fault. Therefore after completing all checks and repairs the fault memory must be interrogated and if necessary erased.
  => Page 7 , interrogating and erasing fault memory
- Vehicles with an airbag are fitted with a crash/fuel shut-off. It reduces the risk of a vehicle burning in the event of a crash in that the fuel pump is switched off by the fuel pump relay. At the same time this device improves the starting of the engine because as soon as the door is opened the fuel pump is activated to build-up pressure in the fuel system.

Safety precautions =>Page 78

Rules for cleanliness => Page 79

Technical data => Page 80

Checking intake system for leaks (unmetered air) => Page 110 .

Checking engine operating mode => Page 122

Protected by copyright. Copying for private or commercial purposes, in part or in whole, is not permitted unless authorised by Volkswagen AG. Volkswagen AG does not guarantee or accept any liability with respect to the correctness of information in this document. Copyright by Volkswagen AG.

satelettronica

1.4 - Removing and installing parts of the injection system

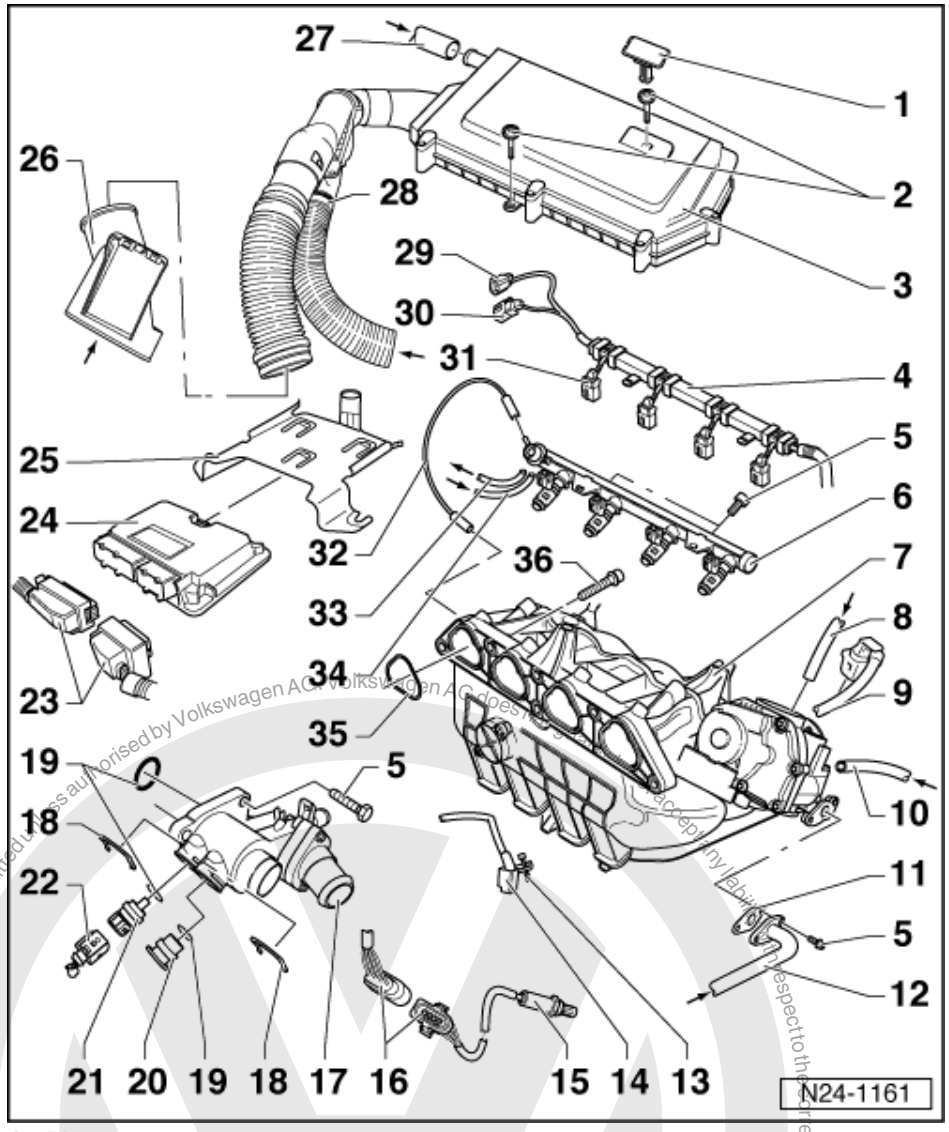

1 Plug
- Note installation position

2 3 Nm
- Notes on installing => Page 78

3 Air cleaner
- Dismantling and assembling => Page 75
- Removing and installing air cleaner => Page 78 , Fig. 3

4 Cable/line guide
- Clipped onto fuel rail

5 10 Nm

6 Fuel manifold with injectors
- Dismantling and assembling => Page 72

satelettronica

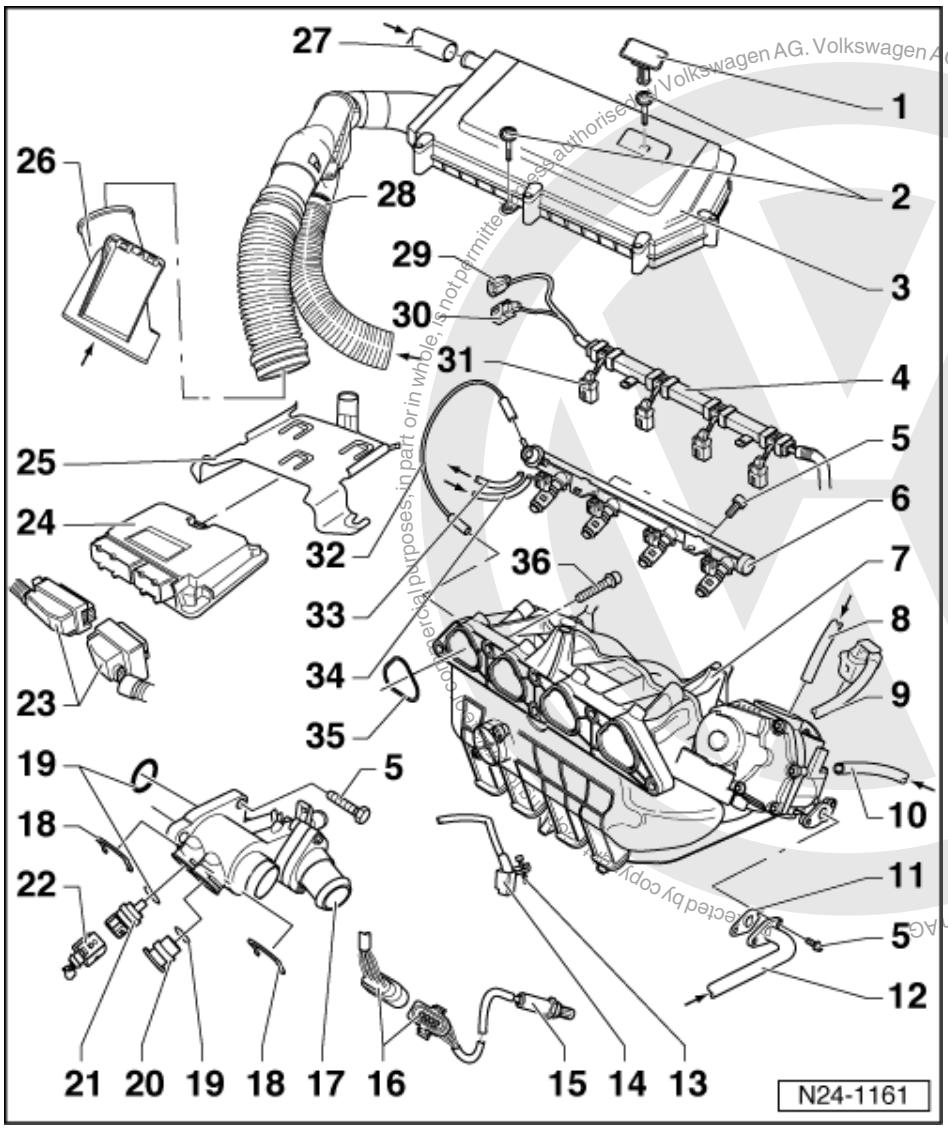

Volkswagen AG. Volkswagen AG does not guarantee or accept any liability with respect to the correctness of information in this document. Copyright by Volkswagen AG. ... commercial purposes, in part or in whole, is not permitted unless authorised by Volkswagen AG. ... protected by copyright.

7 Intake manifold
- Dismantling and assembling => Page 69

8 From activated charcoal filter solenoid valve (N80)*/**

=> Repair group 20; removing and installing parts of the fuel supply system; servicing activated charcoal filter system removing and installing parts of the fuel supply system servicing activated charcoal filter system

9 Connector
- Black, 6-pin
- For throttle valve control part (J338)
- Connector contacts are gold-plated

10 From brake servo

11 Gasket
- Renew

satelettronica

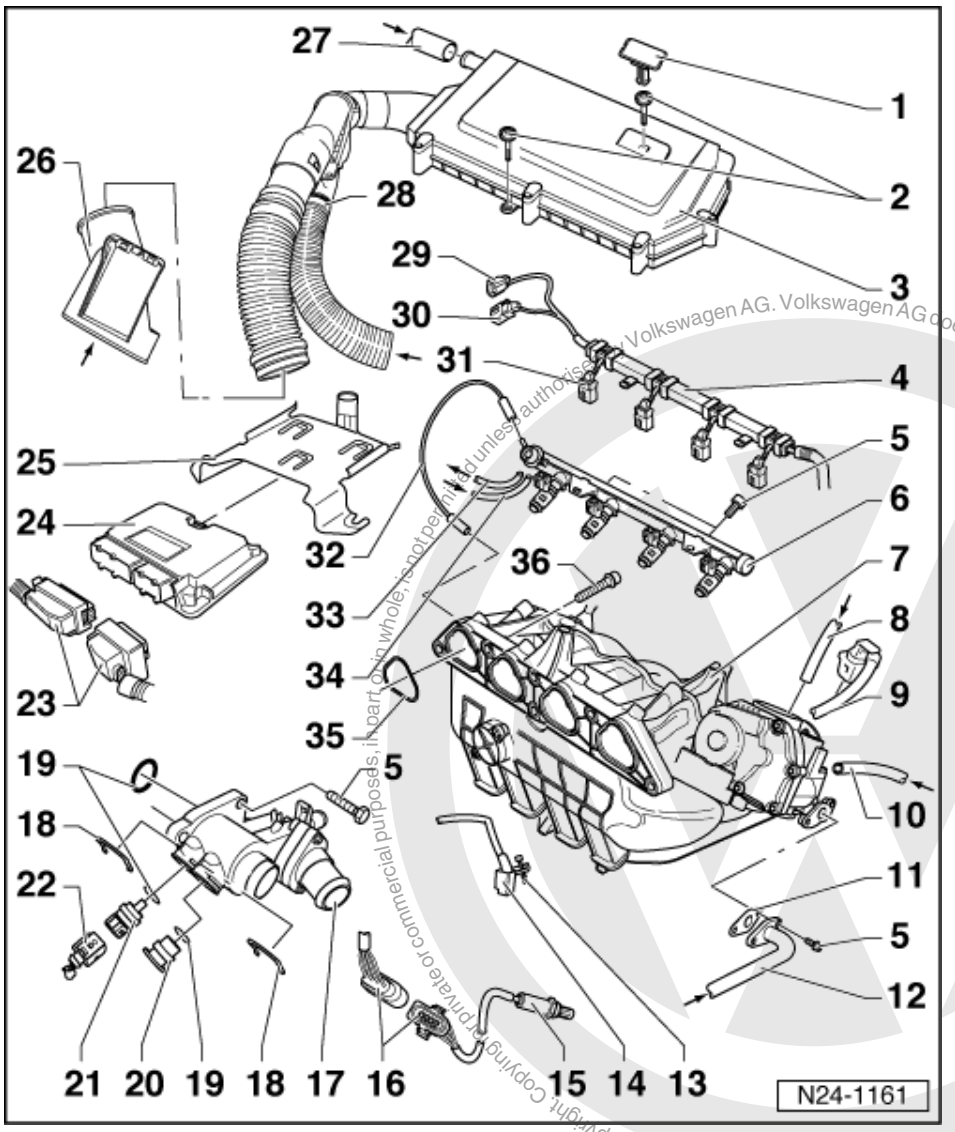

12 From exhaust gas recirculation valve

=> Repair group 26; Exhaust gas recirculation system; Servicing parts of the exhaust gas recirculation system Exhaust gas recirculation system Servicing parts of the exhaust gas recirculation system

13 5 Nm

14 Engine speed sender (G28)*

- To remove, remove intake manifold item 7
- Checking => Page 98
- Fitting location => Page 54 , fitting location overview

Protected by copyright. Copying for private or commercial purposes, in part or in whole, is not permitted unless authorised by Volkswagen AG. Volkswagen AG does not guarantee or accept any liability with respect to the correctness of information in this document. Copyright by Volkswagen AG.
satelettronica

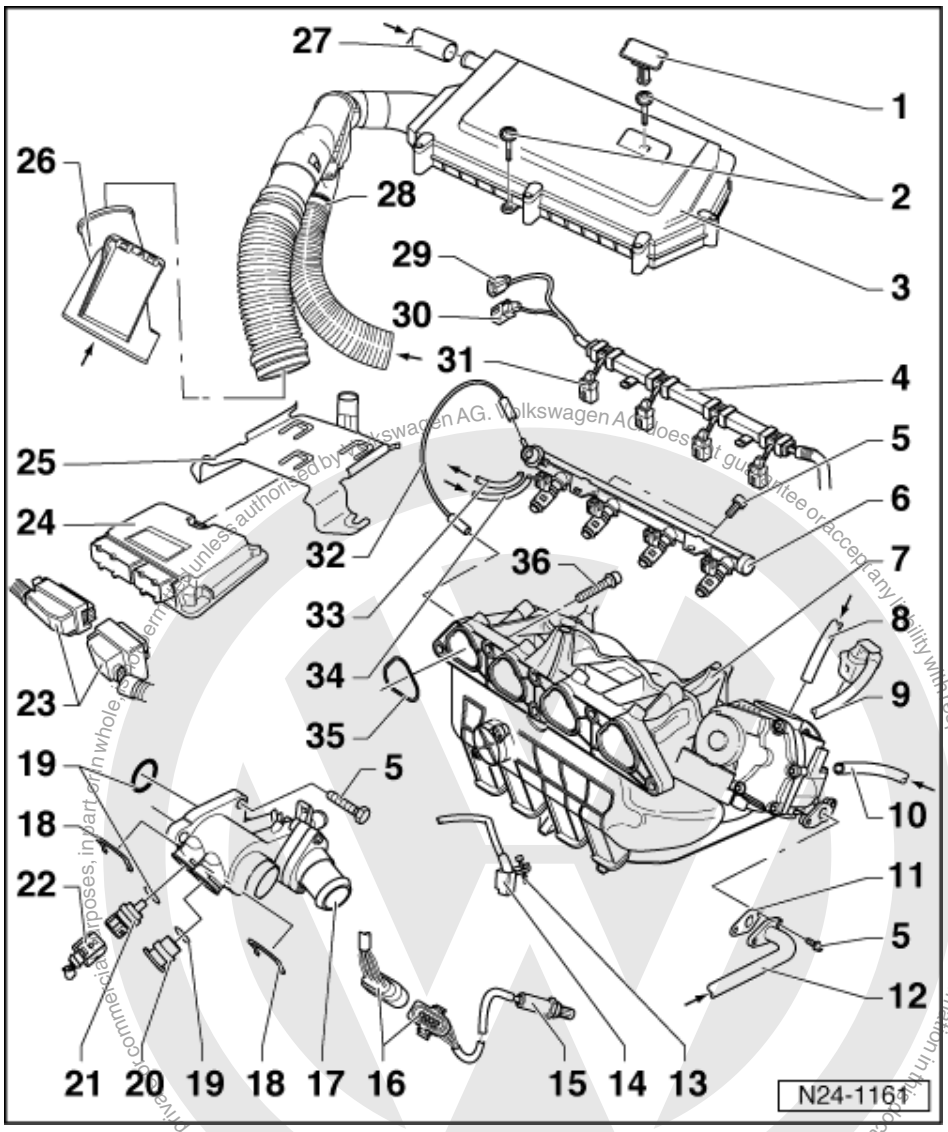

15 Lambda probe 1 before catalyst (G39)*, 50Nm

- Grease only the threads with "G 052 112 A3"; "G 052 112 A3" must not get into the slots on the probe body
- Remove and install with ring spanner 3337
- Checking Lambda control
  => Page 115
- Probe heating voltage supply via fuel pump relay (J17)
- Checking Lambda probe heating => Page 80
- Check probe heating for continuity
- Fitting location => Page 54 , fitting location overview

satelettronica

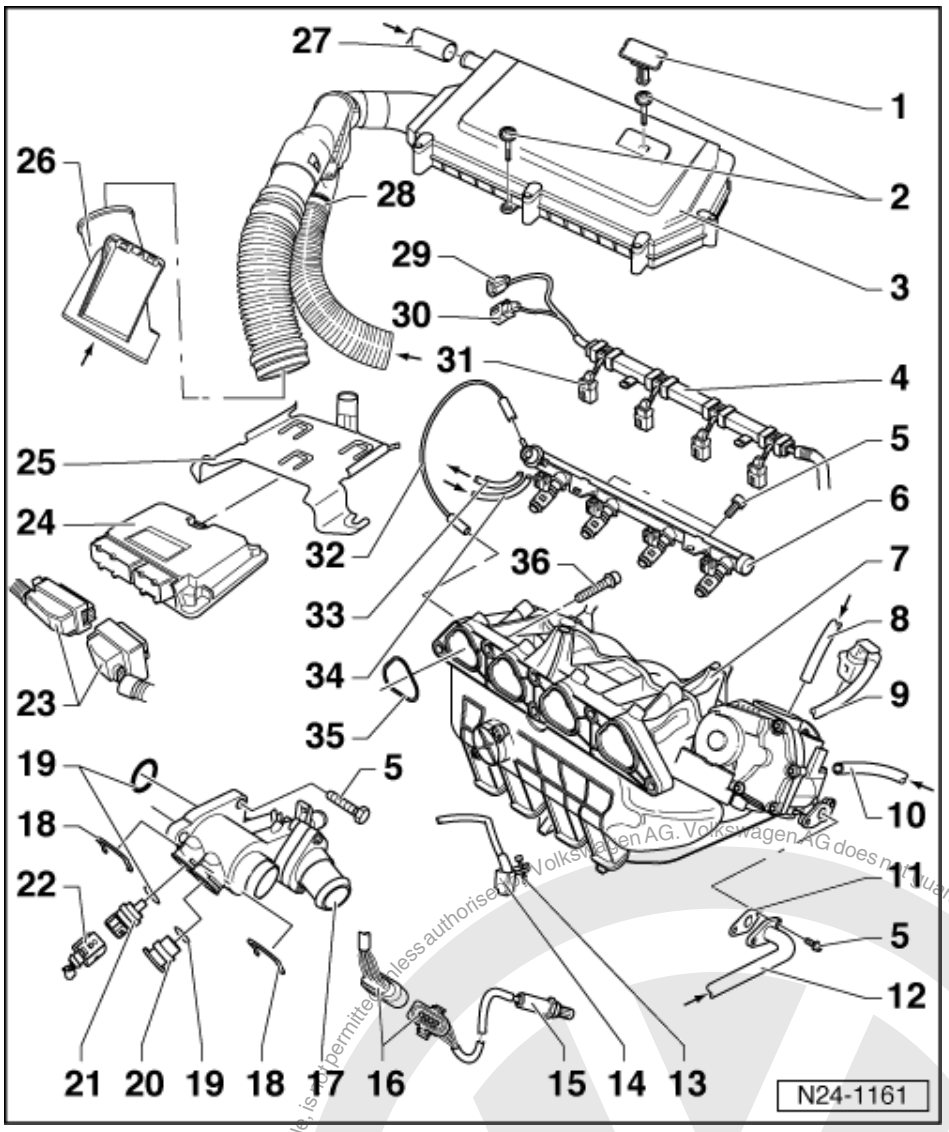

16 4- and 6-pin connector
- Black
- For Lambda probe and Lambda probe heating before catalyst
- Connector contacts 3 and 4 are gold-plated
- Fitting location => Page 54 , fitting location overview

17 Thermostat housing

18 Retaining clip
- Check seated securely

19 O-ring
- Renew if damaged

20 Plug
- If necessary release pressure in cooling system before removing

Protected by copyright. Copying for private or commercial purposes, in part or in whole, is not permitted unless authorised by Volkswagen AG. Volkswagen AG does not guarantee or accept any liability with respect to the correctness of information in this document. Copyright by Volkswagen AG.
satelettronica

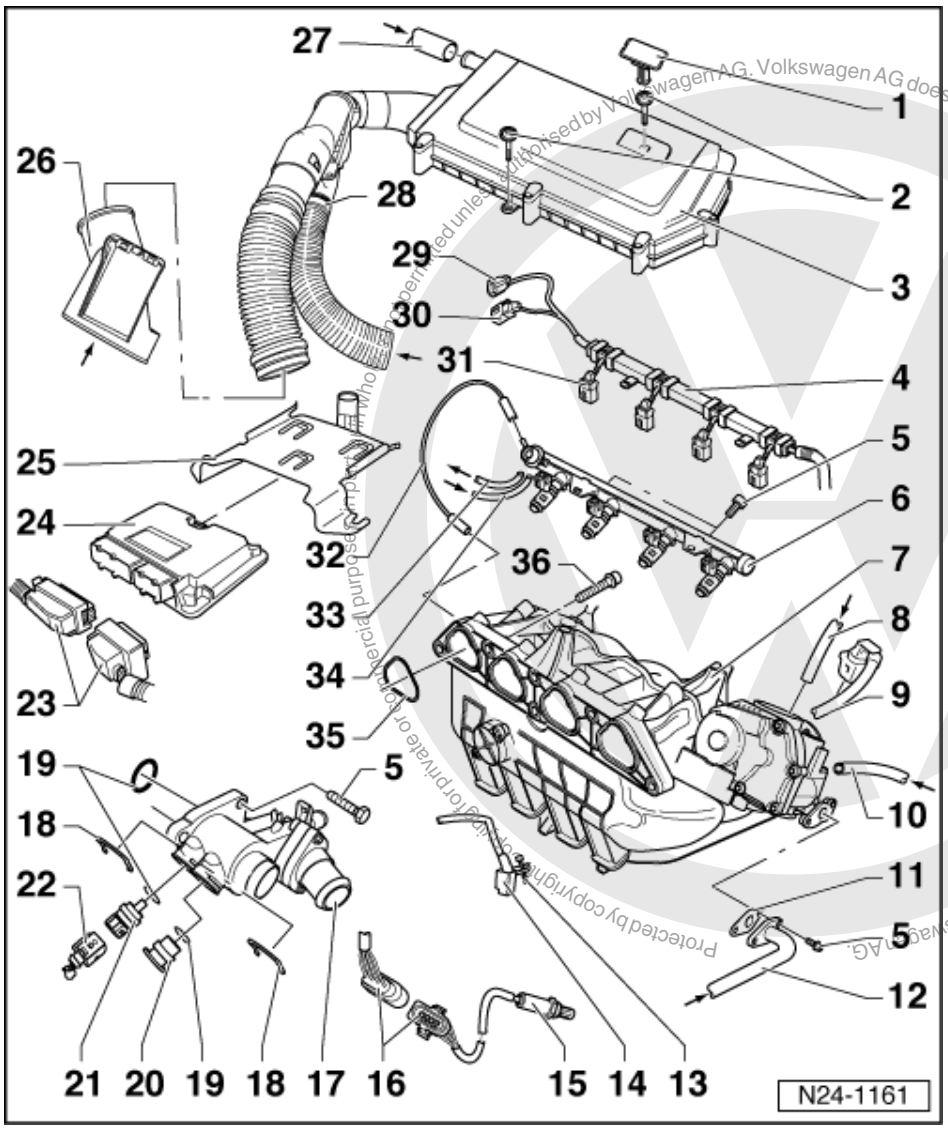

Volkswagen AG. Volkswagen AG does not guarantee or accept any liability with respect to the correctness of information in this document. Copyright by Volkswagen AG.
Protected by copyright. Copying for private or commercial purposes, in whole or in part, is not permitted unless authorised by Volkswagen AG.
satelettronica

21 Coolant temperature sender (G62)*

- For engine control unit
- With coolant temperature gauge sender (G2)
- If necessary release pressure in cooling system before removing
- Resistance values between contacts 3 and 4
  =>Page 77 , Fig. 1
- Checking =>Page 94

22 Connector

- Black, 4-pin
- For coolant temperature sender (G62) and coolant temperature gauge sender (G2)

23 Connector

- Only disconnect or connect with ignition switched off

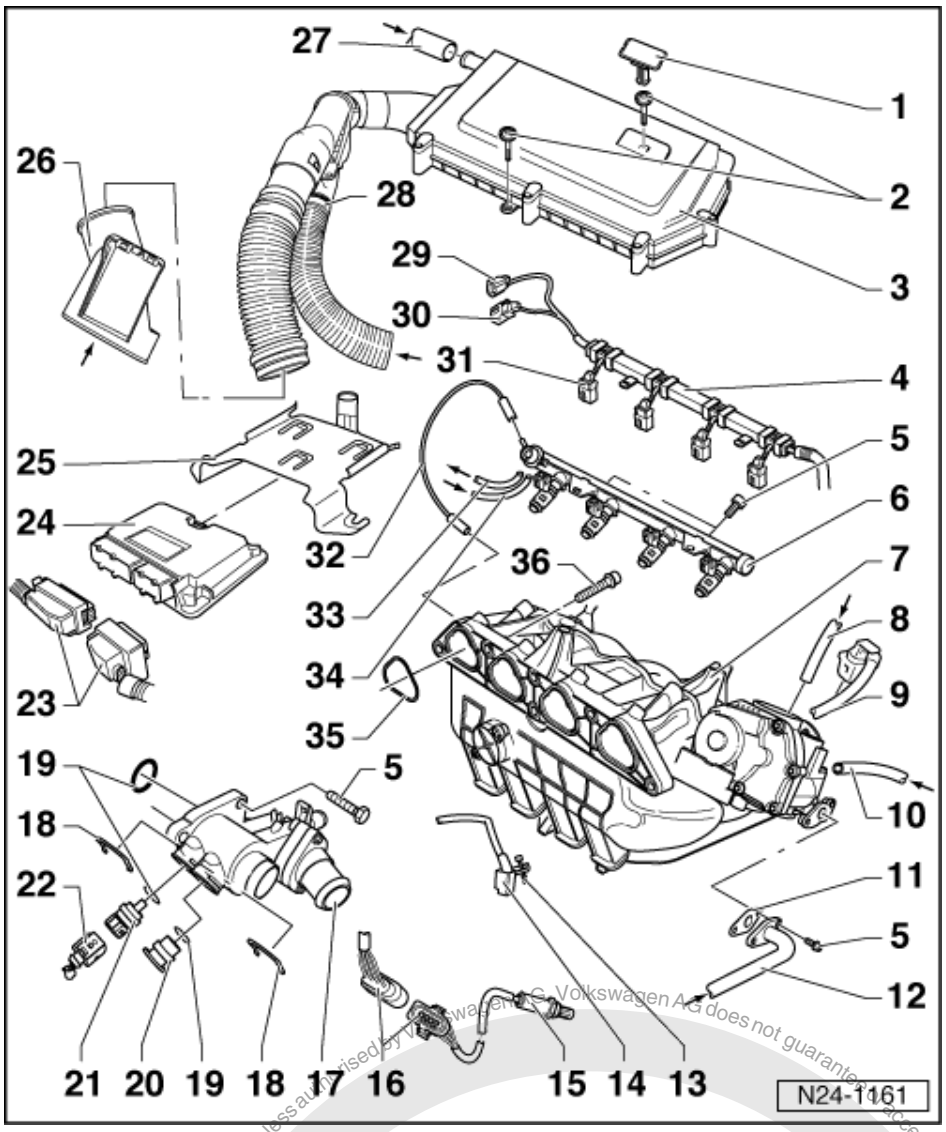

24 Engine control unit*

(4LV injection system control unit -J537)

- Checking voltage supply => Page 123
- If replaced carry out basic setting => Page 128
- On replacement, the control unit must be matched to the electronic immobilizer => Page 130
- Renew => Page 126
- Fitting location => Page 54 , engine compartment overview

25 Retaining frame

26 Connecting piece for cold air intake

27 Crankcase breather hose

- From oil separator:

=> Repair group 17; Removing and installing parts of lubrication system Removing and installing parts of lubrication system

satelettronica

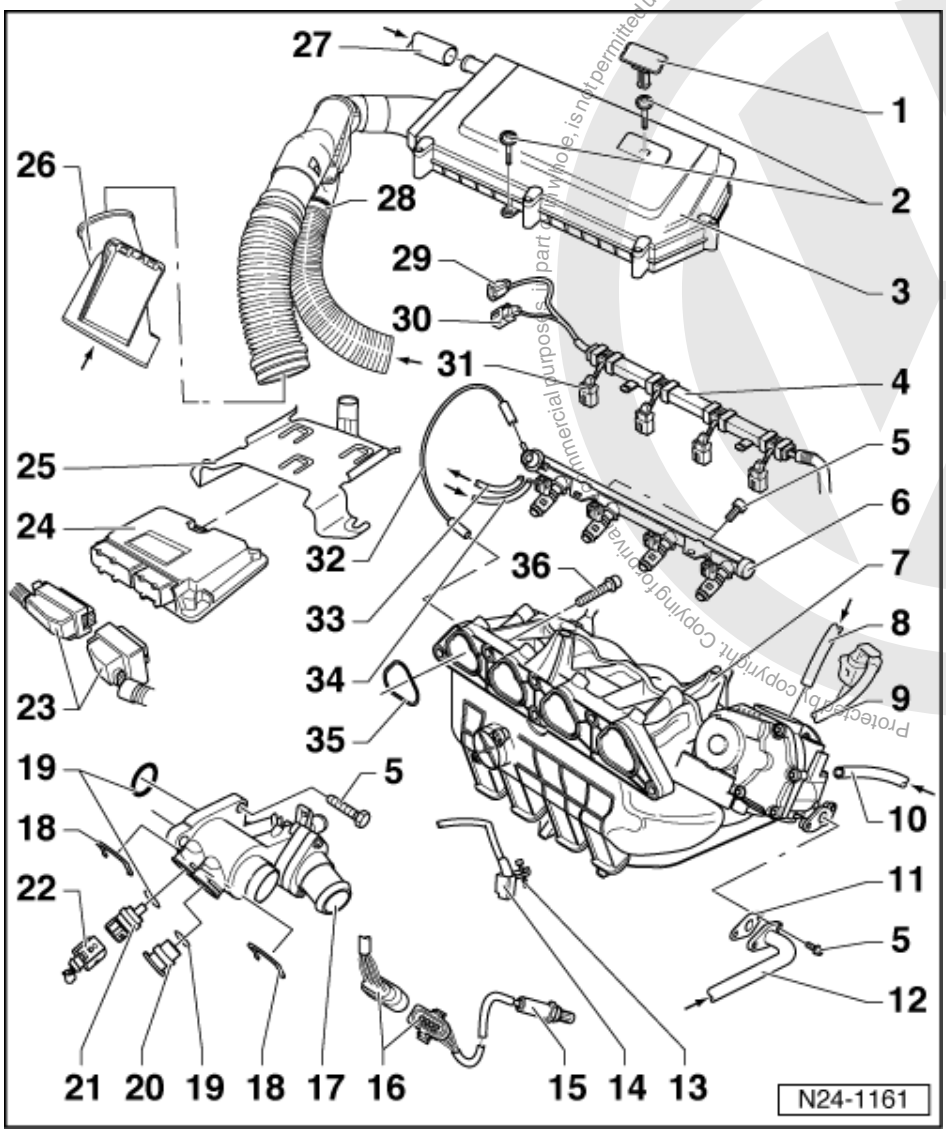

28 Warm air intake hose

- From warm air collector plate:

=> Repair group 26; Removing and installing parts of exhaust system Removing and installing parts of exhaust system

29 Connector

- Black, 4-pin
- For intake manifold pressure sender and sender for intake air temperature in intake manifold
- Connector contacts are gold-plated
- Fitting location => Page 54 , engine compartment overview

30 Connector

- Black, 2-pin
- For knock sensor 1 (G61)
- Connector contacts are gold-plated
- Fitting location => Page 54 , engine compartment overview

31 Connector

- Black, 2-pin
- For injector (N30...N33)

Protected by copyright. Copying for private or commercial purposes, in part or in whole, is not permitted unless authorised by Volkswagen AG. Volkswagen AG does not guarantee or accept any liability with respect to the correctness of information in this document. Copyright by Volkswagen AG.
satelettronica

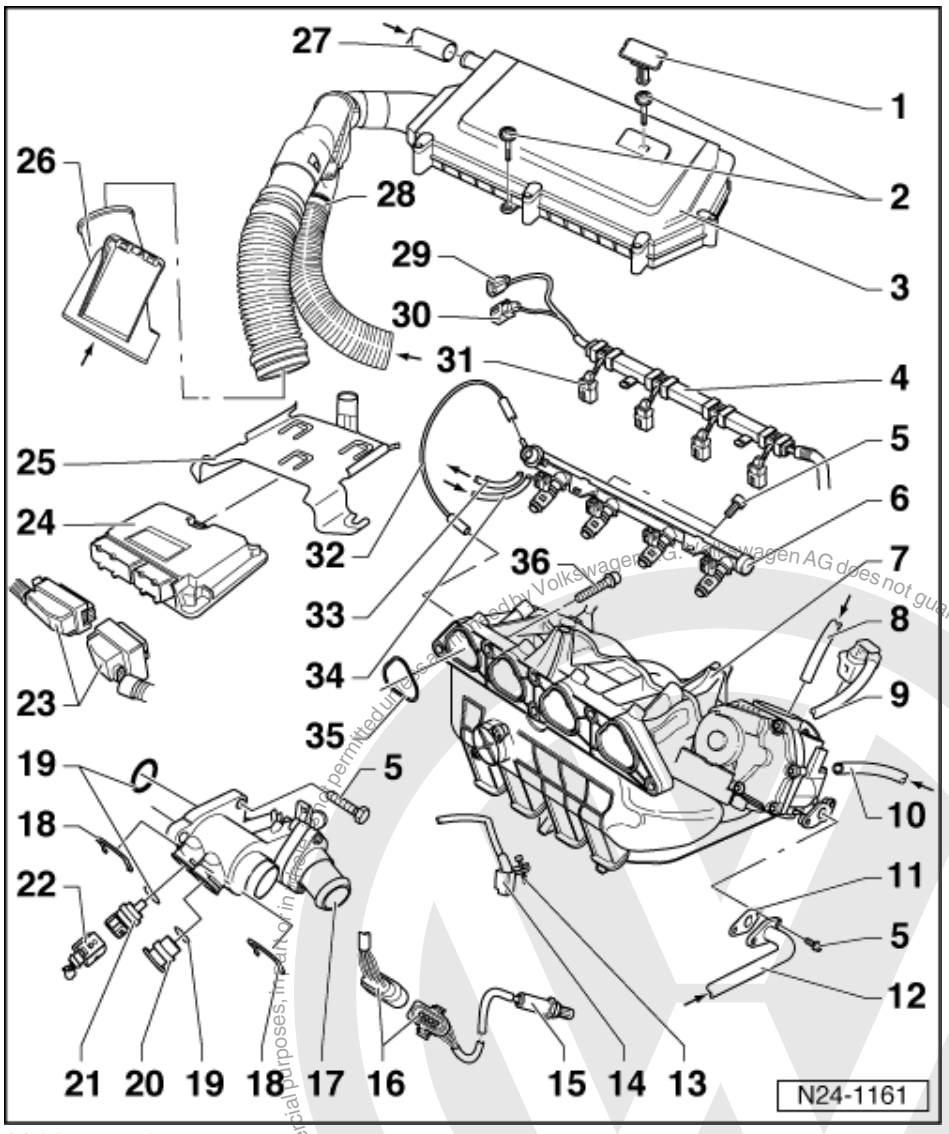

32 Vacuum hose

33 Return hose

- Blue or with blue marking
- Secure with spring-type clips
- Check securely seated
- To the fuel delivery unit in fuel tank

=> Repair Group 20; Removing and installing parts of fuel supply system; Removing and installing fuel tank with attachments and fuel filter Removing and installing parts of fuel supply system Removing and installing fuel tank with attachments and fuel filter

34 Supply hose

- Black with white marks
- Secure with spring-type clips
- Check securely seated
- From fuel filter:

=> Repair Group 20; Removing and installing parts of fuel supply system; Removing and installing fuel tank with attachments and fuel filter Removing and installing parts of fuel supply system Removing and installing fuel tank with attachments and fuel filter

satelettronica

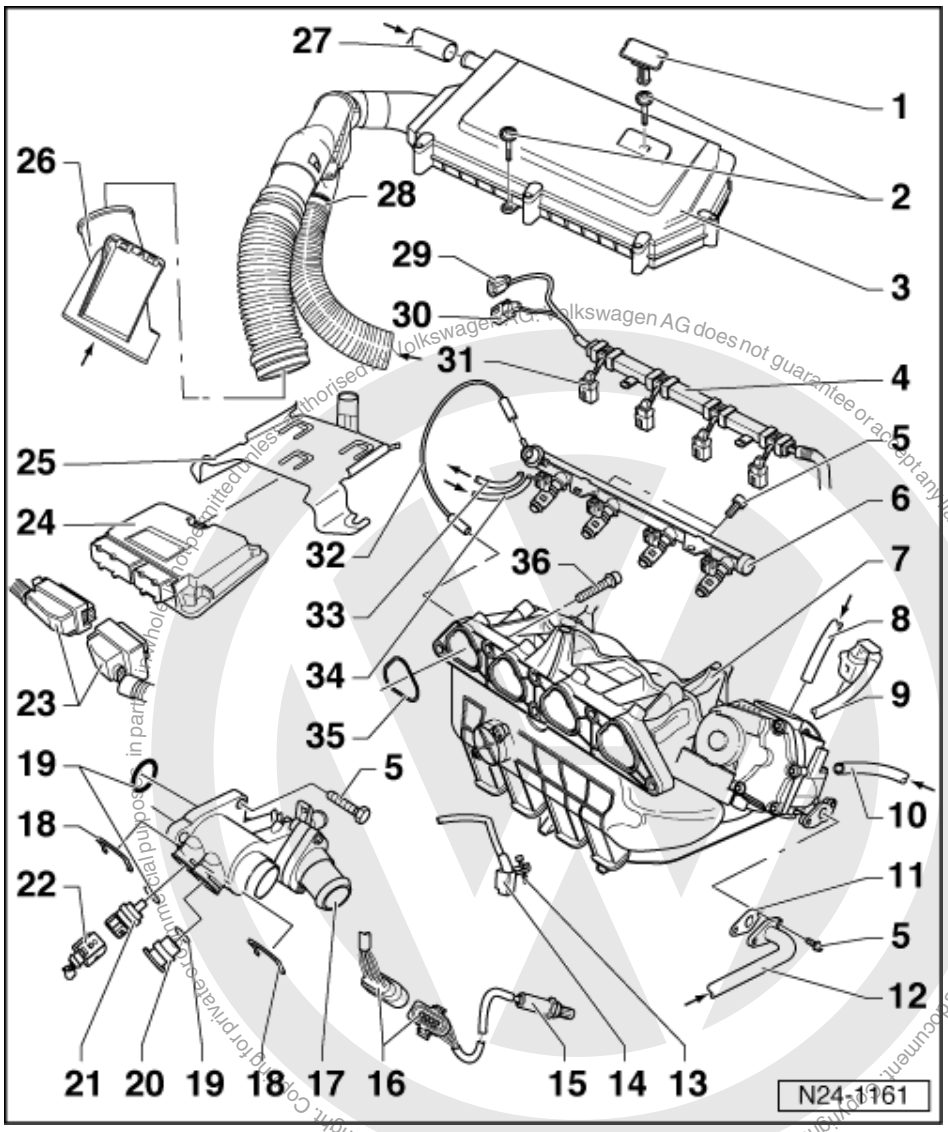

35 Seal

- Renew

36 20 Nm

Protected by copyright. Copying for private or commercial purposes, in part or whole is not permitted unless authorised by Volkswagen AG. Volkswagen AG does not guarantee or accept any liability with respect to the correctness of information in this document. Copyright by Volkswagen AG.
satelettronica

1.5 - Dismantling and assembling intake manifold

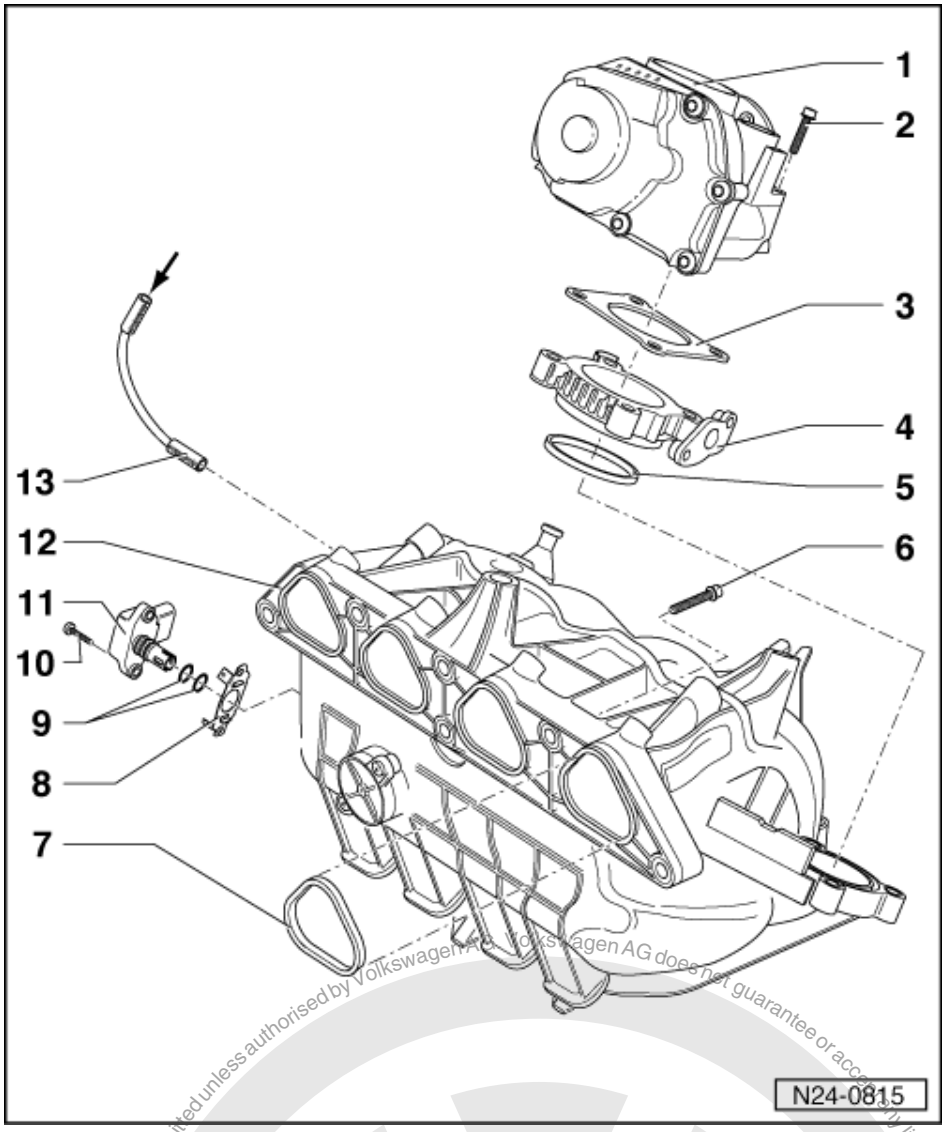

1 Throttle valve control part (J338)*
- Checking => Page 85
- If replaced match engine control unit => Page 128
- Connector contacts are gold-plated
- No cable disc for accelerator cable as this is an electronic accelerator system
- 6-pin connector

2 10 Nm

3 Gasket
- Note installation position
- Renew

4 Intake connecting flange

5 Seal
- Renew if damaged

6 20 Nm

Protected by copyright. Copying for private or commercial purposes, in part or in whole, is not permitted unless authorised by Volkswagen AG. Copyright by Volkswagen AG. Volkswagen AG does not guarantee or accept any liability with respect to the correctness of information in this document.
satelettronica

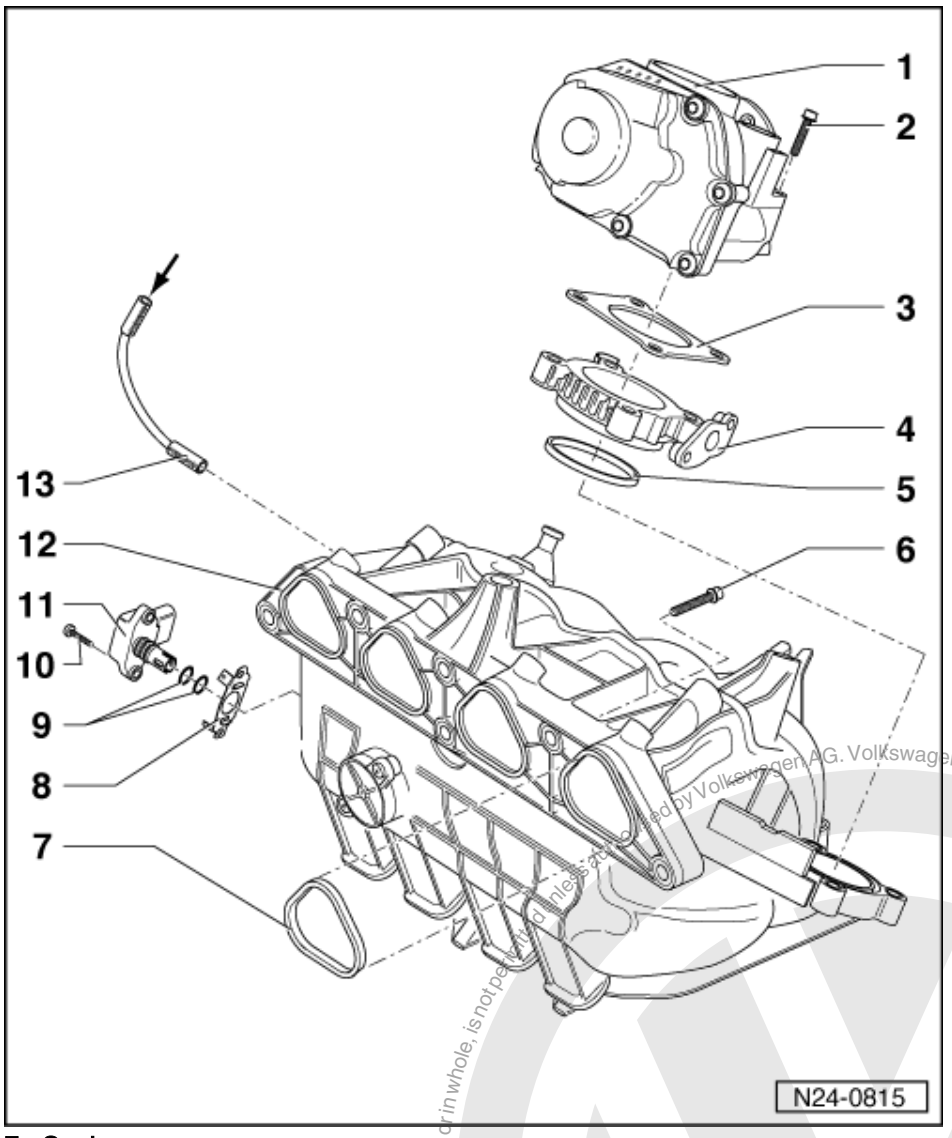

7 Seal
- Renew

8 Guide plate
- Note installation position
- Renew if damaged

9 O-ring
- Renew if damaged

10 3 Nm

11 Intake manifold pressure sender (G71)* with intake air temperature sender (G42)*
- Checking intake manifold pressure sender =>Page 87
- Checking intake air temperature sender =>Page 90
- Intake air temperature sender resistance values between contacts 1 and 2=>Page 77 , Fig. 2
- Connector contacts are gold-plated

Protected by copyright. Copying for private or commercial purposes, in part or in whole, is not permitted unless authorised by Volkswagen AG. Volkswagen AG does not guarantee or accept any liability with respect to the correctness of information in this document. Copyright by Volkswagen AG.
satelettronica

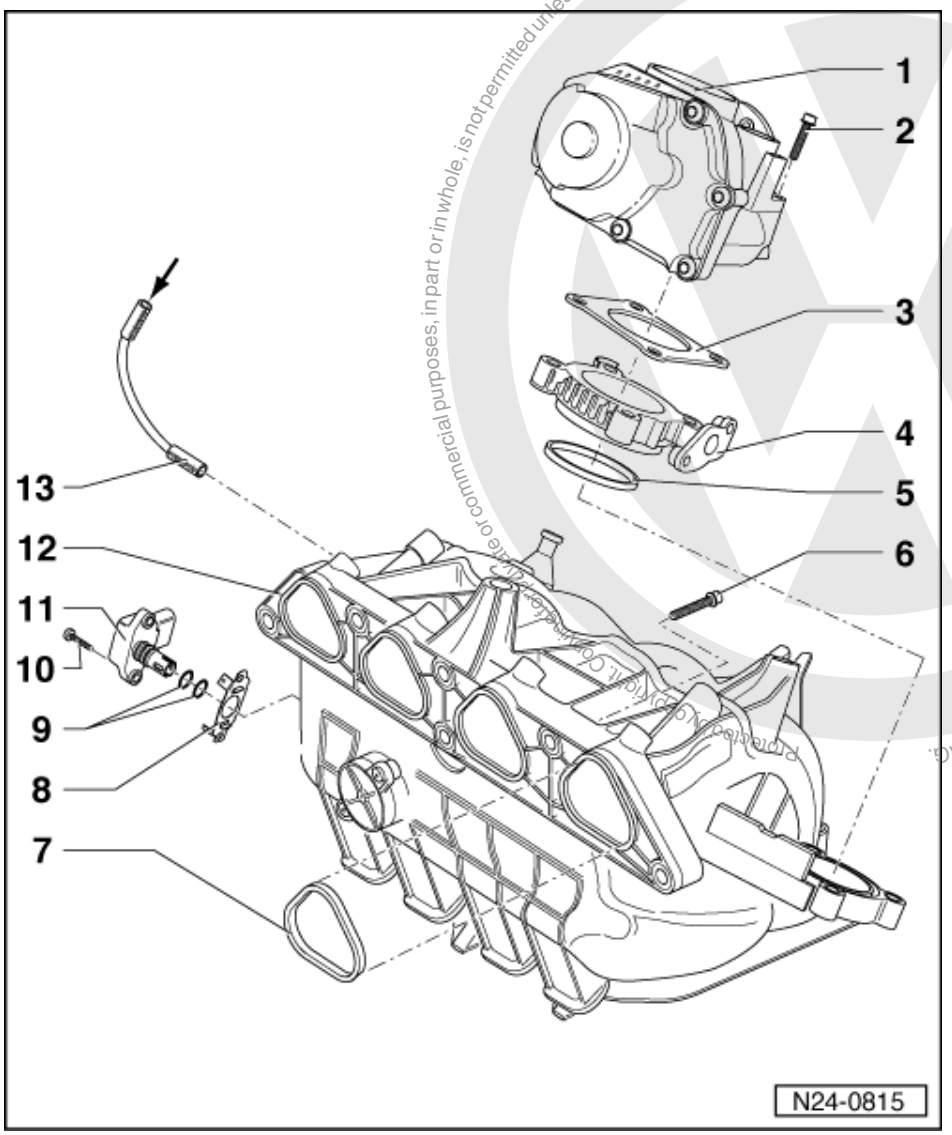

12 Intake manifold

- Removing and installing
  =>Page 59 , removing and installing parts of the injection system

13 Vacuum hose

- From fuel pressure regulator
  => Page 74 , item 12

Reproduction of commercial purposes, in part or in whole, is not permitted unless authorised by Volkswagen AG. Volkswagen AG does not guarantee or accept any liability with respect to the correctness of information in this document. Copyright by Volkswagen AG.
satelettronica

1.6 - Dismantling and assembling fuel rail with injectors

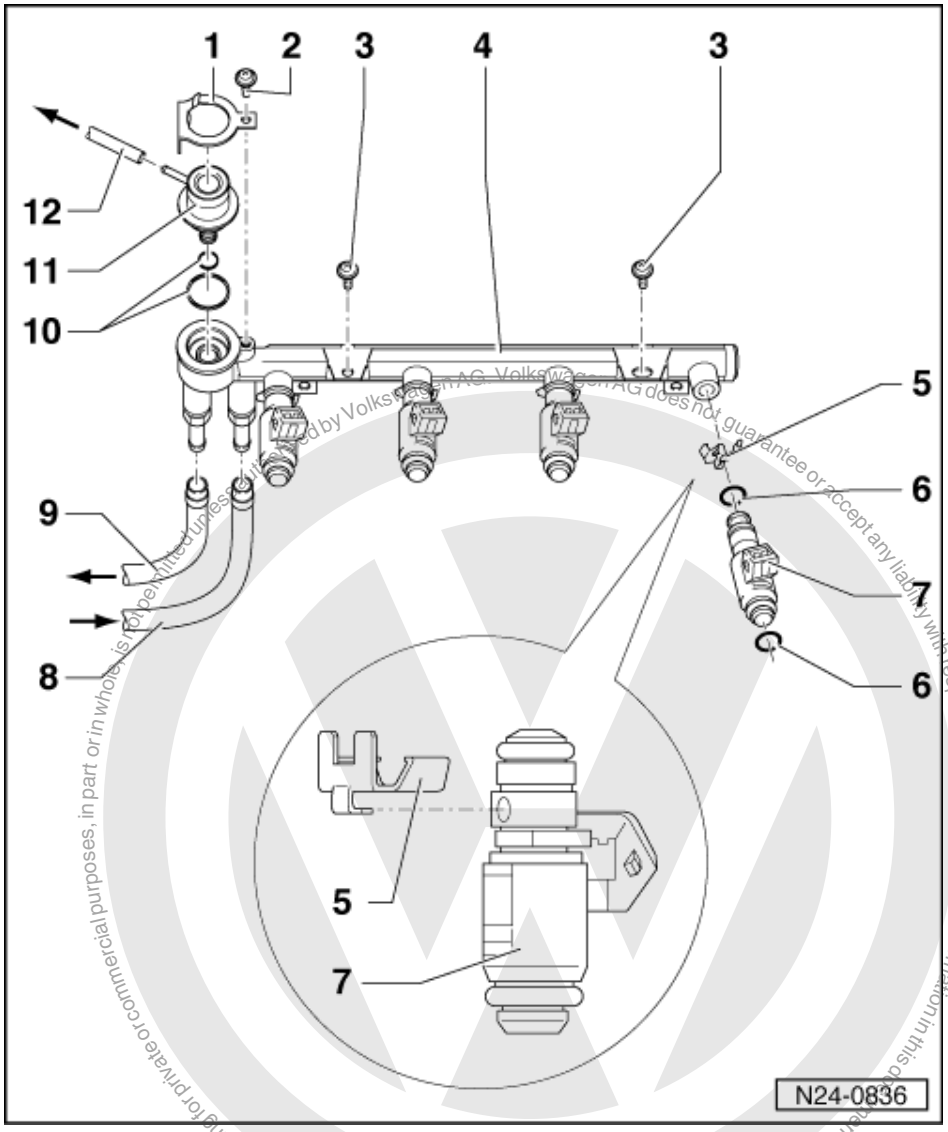

1 Retaining plate
- Note installation position
- Renew if damaged

2 5 Nm

3 10 Nm

4 Fuel rail
- Removing and installing
  =>Page 104 , checking spray pattern and injectors for leaks

5 Retaining clip
- Ensure seated correctly at injector and fuel rail

Protected by copyright. Copying for private or commercial purposes, in part or in whole, is not permitted unless authorised by Volkswagen AG. Volkswagen AG does not guarantee or accept any liability with respect to the correctness of information in this document. Copyright by Volkswagen AG.
satelettronica

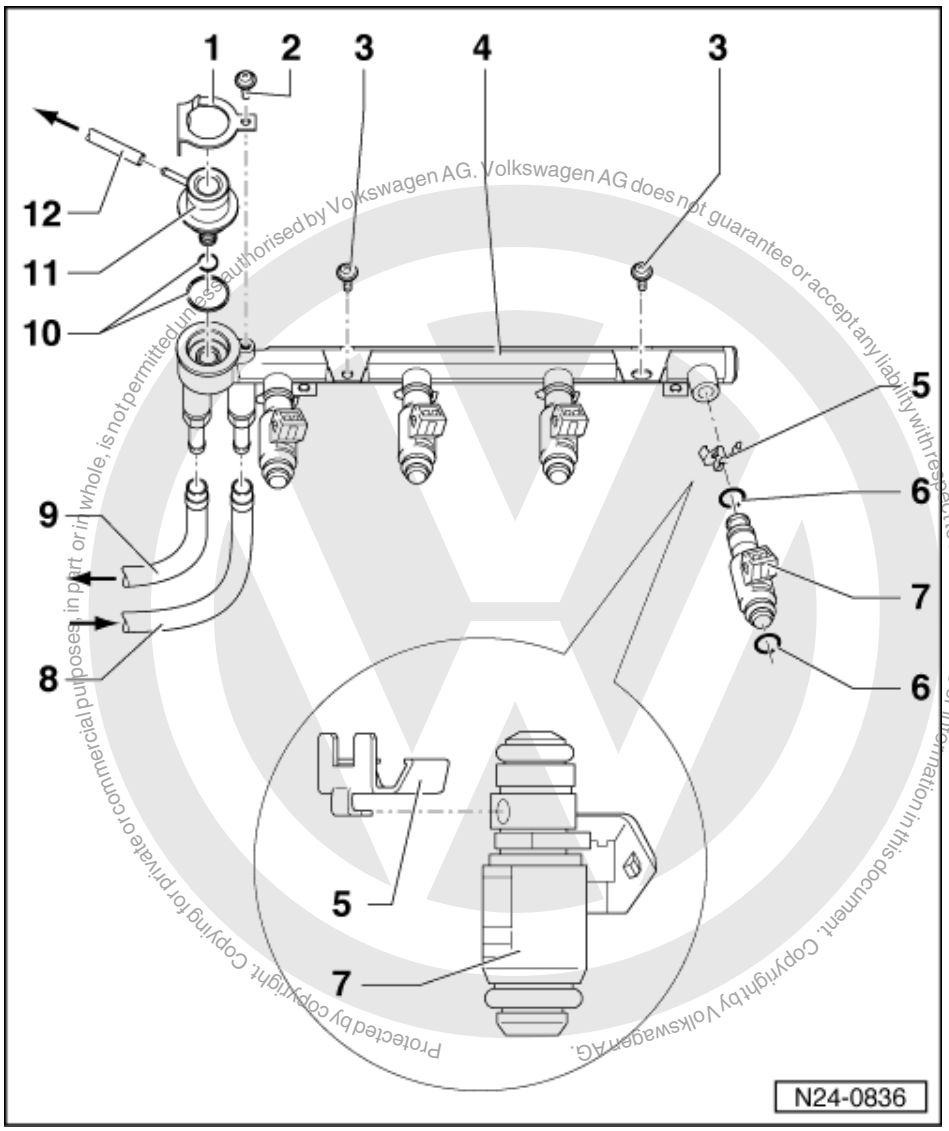

Protected by copyright. Copying for private or commercial purposes, in part or in whole, is not permitted unless authorised by Volkswagen AG. Volkswagen AG does not guarantee or accept any liability with respect to the correctness of information in this document. Copyright by Volkswagen AG.

6 O-ring
- Renew
- Before installing moisten with clean engine oil

7 Injectors (N30...N33)*
- Checking => Page 100
- Resistance 14.0...17.0 ω

8 Supply hose
- Black with white marks
- Secure with spring-type clips
- Check securely seated
- From fuel filter:

=> Repair Group 20; Removing and installing parts of fuel supply system; Removing and installing fuel tank with attachments and fuel filter Removing and installing parts of fuel supply system Removing and installing fuel tank with attachments and fuel filter

satelettronica

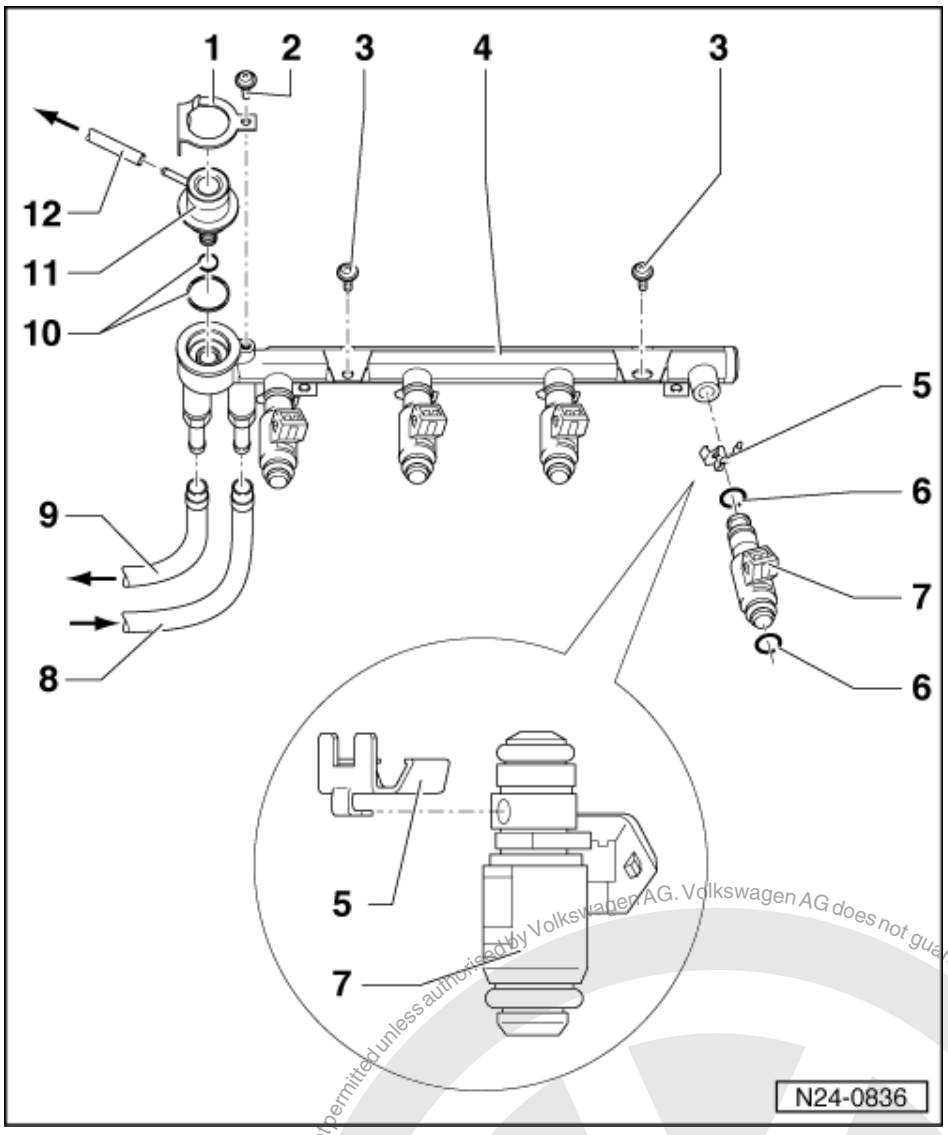

9 Return hose
- Blue or with blue marking
- Secure with spring-type clips
- Check securely seated
- To the fuel delivery unit in fuel tank

=> Repair Group 20; Removing and installing parts of fuel supply system; Removing and installing fuel tank with attachments and fuel filter Removing and installing parts of fuel supply system Removing and installing fuel tank with attachments and fuel filter

10 O-ring
- Renew if damaged

11 Fuel pressure regulator
- Checking => Page 107 , checking fuel pressure regulator and holding pressure

12 Vacuum hose
- To intake manifold => Page 71 , item 13

satelettronica
Protected by copyright. Copying for private or commercial purposes, in part or in whole, is not permitted unless authorised by Volkswagen AG. Volkswagen AG does not guarantee or accept any liability with respect to the correctness of information in this document. Copyright by Volkswagen AG.

1.7 - Dismantling and assembling air cleaner

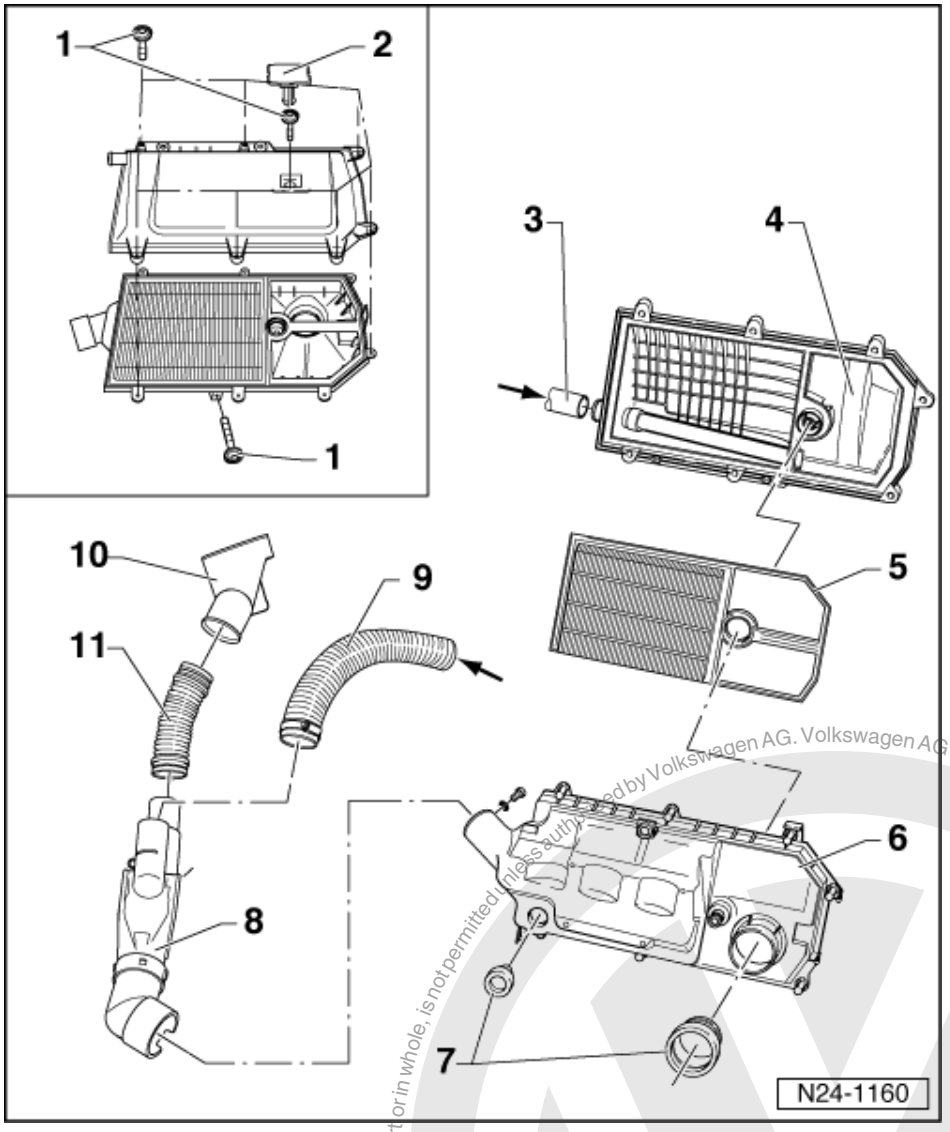

Removing and installing air cleaner => Page 78 , Fig. 3

1 3 Nm
- Notes on installing => Page 78

2 Plug
- Note installation position

3 Crankcase breather hose
- From oil separator:

=> Repair group 17; Removing and installing parts of lubrication system Removing and installing parts of lubrication system

4 Air cleaner upper part
5 Filter element
6 Air cleaner lower part

Protected by copyright. Copying for private or commercial purposes, in part or in whole, is not permitted unless authorised by Volkswagen AG. Volkswagen AG does not guarantee or accept any liability with respect to the correctness of information in this document. Copyright by Volkswagen AG.
satelettronica

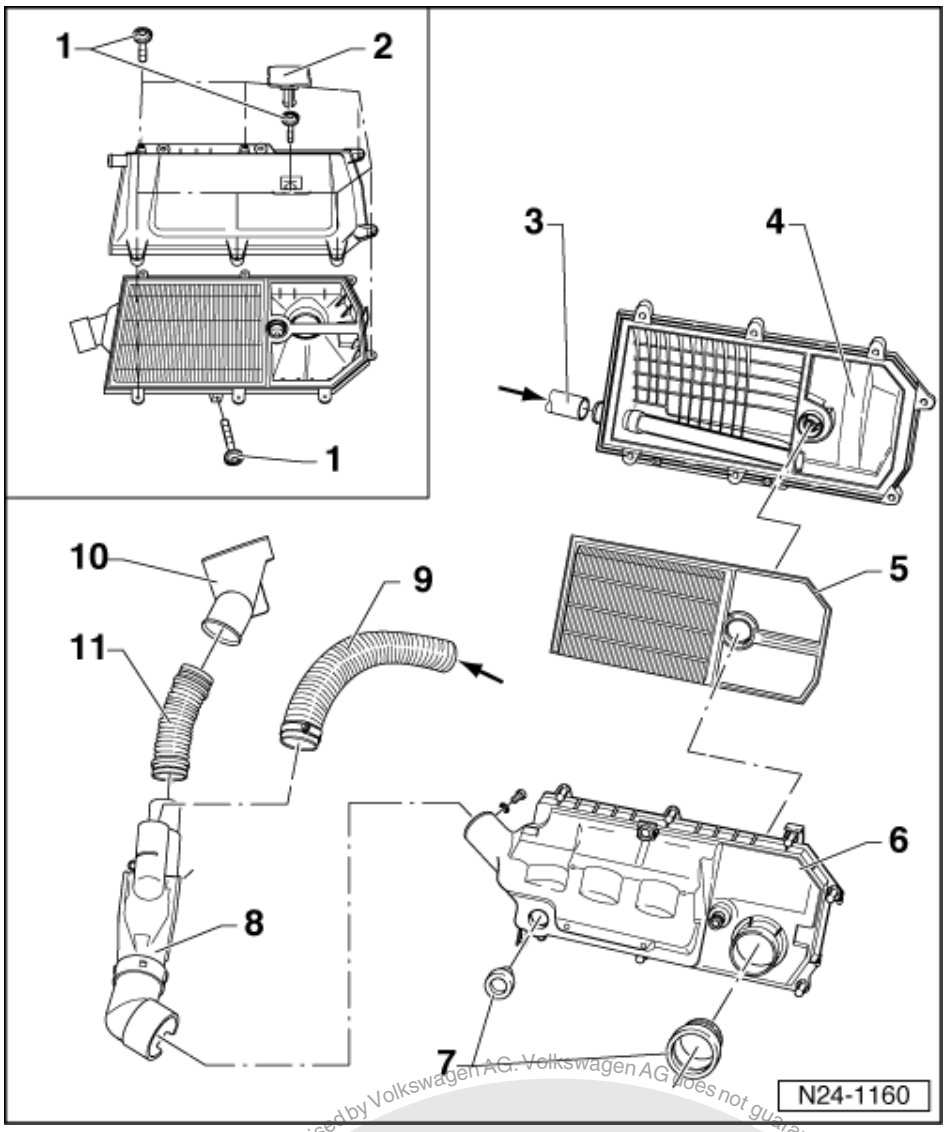

7 Seal
- Check securely seated
- Renew if damaged

8 Air intake housing with regulating flap
- Check intake air preheating => Page 111

9 Warm air intake hose
- From warm air collector plate:

=> Repair group 26; Removing and installing parts of exhaust system Removing and installing parts of exhaust system

10 Connecting piece for cold air intake

11 Connecting hose

Protected by copyright. Copying for private or commercial purposes, in part or in whole, is not permitted unless authorised by Volkswagen AG. Volkswagen AG does not guarantee or accept any liability with respect to the correctness of information in this document. Copyright by Volkswagen AG.

satelettronica

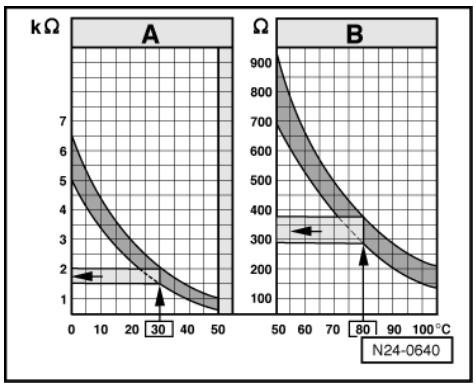

-> Fig. 1 Resistance values for coolant temperature sender (G62)

The diagram is divided into two temperature ranges:

A - From 0...50 °C
B - From 50...105 °C

Examples:

- 30 °C is in range A and corresponds to a resistance of 1.5...2.0 kω
- 80 °C is in range B and corresponds to a resistance of 275...375 ω

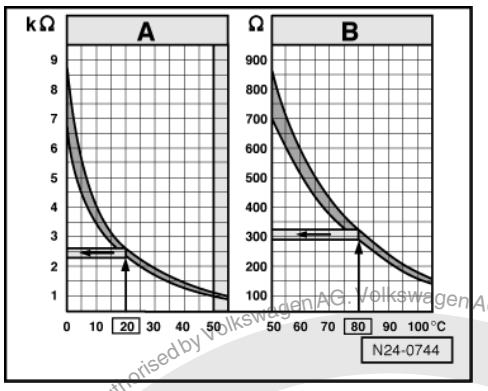

-> Fig.2 Resistance values for intake air temperature sender (G42)

The diagram is divided into two temperature ranges:

A - From 0...50 °C
B - From 50...105 °C

Examples:

- 20 °C is in range A and corresponds to a resistance of 2.3...2.6 kω
- 80 °C is in range B and corresponds to a resistance of 290...330 ω

Protected by copyright. Copying for private or commercial purposes, in part or in whole, is not permitted unless authorised by Volkswagen AG. Volkswagen AG does not guarantee or accept any liability with respect to the correctness of information in this document. Copyright by Volkswagen AG.
satelettronica

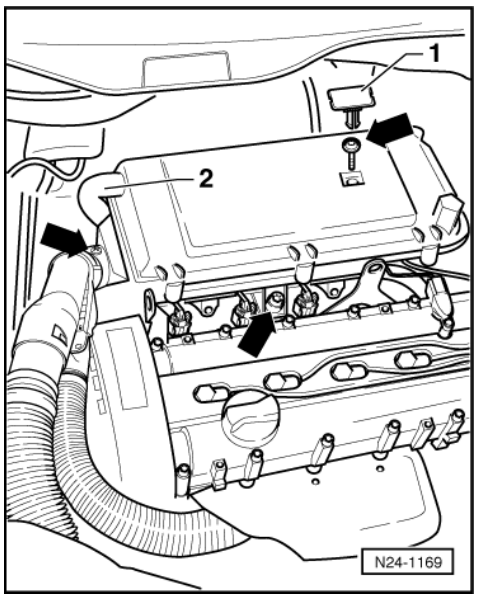

-> Fig. 3 Removing and installing air cleaner

Removing

- Remove cover above camshaft housing.
- Remove plug -1-.
- Pull crankcase breather hose -2- off air cleaner upper part.
- Loosen air cleaner at securing screws marked by arrows.
- Remove air cleaner.

Installing

- Installing the air cleaner is carried out in the reverse order.

Note:

Self-tapping screws/bolts are used to secure the air cleaner to plastic intake pipe as well as to secure the air cleaner upper part to the air cleaner lower part. When these screws/bolts are loosed or tightened using a power tool the threads in the intake manifold or the air cleaner lower part may be damaged.

For this reason the use of a power tool can only be used when:

- The power tool maximum speed is 200 rpm.
- The tightening torque is set to a maximum of 3 Nm.

1.8 - Safety precautions

Warning!
Fuel system is under pressure! Before opening the system place a cloth around the connection. Then release pressure by carefully loosening the connection.

To prevent injuries to persons and/or damage to the fuel injection and ignition system, the following must be noted:

- For safety reasons the fuse No. 40 must be removed from the fuse holder before opening the fuel system, otherwise the fuel pump can be activated by the door contact switch.
- Do not touch or disconnect ignition wiring when the engine is running or being turned at starter speed.

Protected by copyright. Copyright by Volkswagen AG.
Copying for private or commercial purposes, in part or in whole, is not permitted unless authorised by Volkswagen AG. Volkswagen AG does not guarantee or accept any liability with respect to the correctness of information in this document.
satelettronica

- The ignition must be switched off before connecting or disconnecting injection or ignition system wiring or tester cables.

Observe following if test and measuring instruments are required during a test drive:

- Test and measuring instruments must be secured to rear seat and operated by a 2nd person from this location.

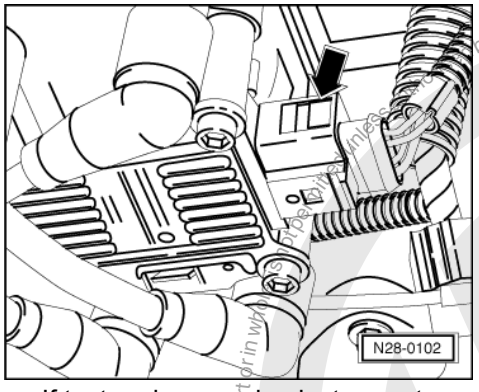

If test and measuring instruments are operated from front passenger's seat and the vehicle is involved in an accident, there is a possibility that the person sitting in this seat may receive serious injuries when the airbag is triggered.

- If the engine is to be turned at starter speed, without starting:

- -> Pull 4 pin connector off ignition transformer -arrow-.

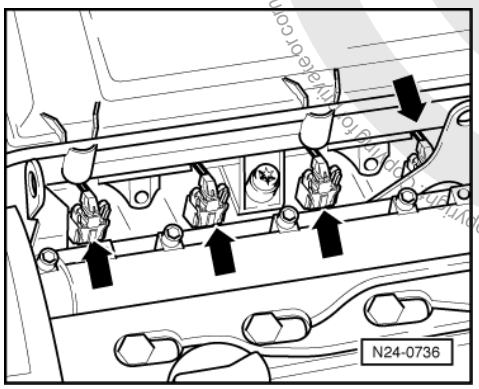

- -> Pull plug -arrows- off all injectors.

1.9 - Rules for cleanliness

When working on the fuel supply/injection system, pay careful attention to the following "5 rules":

- Thoroughly clean all unions and the adjacent areas before disconnecting.
- Place parts that have been removed on a clean surface and cover. Do not use fluffy cloths!
- Carefully cover opened components or seal, if the repair cannot be carried out immediately.
- Only install clean components:
  Only unpack replacement parts immediately prior to installation.
  Do not use parts that have been stored loose (e.g. in tool boxes etc.).
- When the system is open:
  Do not work with compressed air if this can be avoided.
  Do not move vehicle unless absolutely necessary.

Protected by copyright. Copyright by Volkswagen AG. Volkswagen AG does not guarantee or accept any liability with respect to the correctness of information in this document. Copyright by Volkswagen AG.
satelettronica

1.10 - Technical data

Engine code		APE, AUA
Idling check Idling speed2)	rpm	640...9301)
Engine control unit3) System Part number4) - Vehicles with manual gearbox - Vehicles with automatic gearbox		 4LV 036 906 034F 036 906 034G
Governed speed	rpm	from ca. 5700

1) Up-to-date specifications:

=> Exhaust emissions test binder

2) Not adjustable

3) Replacing engine control unit => Page 126

4) For latest part number for engine control unit:

=> Parts film

2 - Checking components

2.1 - Checking components

2.2 - Checking Lambda probe heating for Lambda probe before catalyst

Special tools, workshop equipment, testers, measuring instruments and auxiliary items required

- Fault reader V.A.G 1551 or vehicle system tester V.A.G 1552 with cable V.A.G 1551/3
- Test box V.A.G 1598/31
- Hand multimeter V.A.G 1526 or multimeter V.A.G 1715
- Adapter set V.A.G 1594

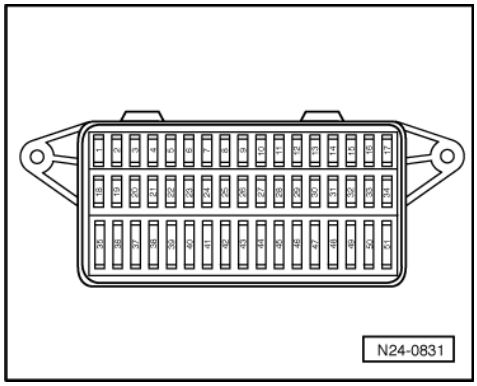

- Current flow diagram

Protected by copyright. Copying for private or commercial purposes, in part or in whole, is not permitted unless authorised by Volkswagen AG. Volkswagen AG does not guarantee or accept any liability with respect to the correctness of information in this document. Copyright by Volkswagen AG.
satelettronica

Check conditions

- -> Fuse No. 1 must be OK.
- The battery voltage must be at least 11.5 V.
- Fuel pump relay must be OK

Test sequence

- Connect fault reader V.A.G 1551 (V.A.G 1552). Start engine and select "Address word" 01 of engine control unit. When doing this the engine must be running at idling speed.
  (Connecting fault reader and selecting engine control unit => Page 4 .)

-> Indicated on display:

```
Rapid data transfer      HELP
Select function XXX
```

- Press keys 0 and 8 for the function "Read measured value block" and confirm entry with Q key.

-> Indicated on display:

```
Read measured value block
Input display group number XXX
```

- Press keys 0, 4 and 1 for "Display group number 41" and confirm entry with Q key.

-> Indicated on display:
(1...4 = Display zones)

```
Read measured value block 41
     1     2     3     4
```

- Check the status of the Lambda probe heating in display zone 2:
  Display: Htg.bC.ON

If the specification is not obtained:

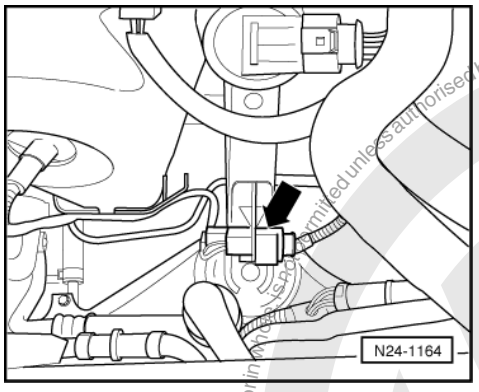

- -> Separate the 6-pin connector (black) to Lambda probe before catalyst (G39).

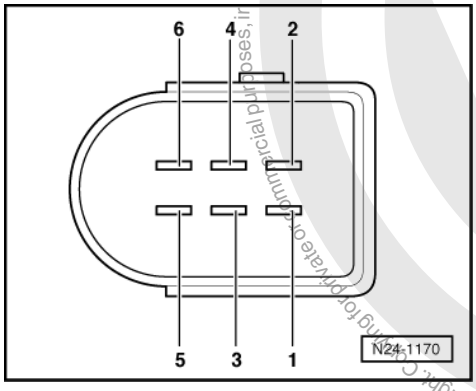

satelettronica
Protected by copyright. Copying for private or commercial purposes, in part or in whole, is not permitted unless authorised by Volkswagen AG. Volkswagen AG does not guarantee or accept any liability with respect to the correctness of information in this document. Copyright by Volkswagen AG.

- -> Check probe heating for continuity at Lambda probe connector contacts 1 and 2.

Note:
The heater element resistance is approx. 2.9...3.7 ω at room temperature. Even slight increases in room temperature increase the resistance greatly.
If it is determined that probe heating has an open circuit:
- Replace Lambda probe before catalyst (G39).

If probe heating has continuity:

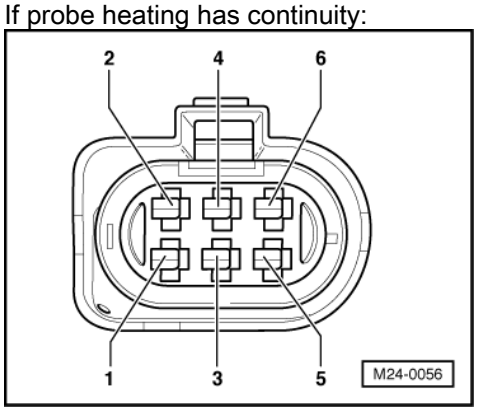

- -> Set multimeter to measure voltage and connect to contacts 1 and 2 on connector to control unit.
- Start engine and run at idling speed.
- Measure the voltage supply:
  When display group 41, display zone 2 displays
  Display, Htg.bC.ON:
    Specification: 11.0...14.5 V
  Display, Htg. bC.ON/Htg.bC.OFF (alternating)
    Specification: Between 0.0...12.0 V fluctuating
- Switch off ignition.

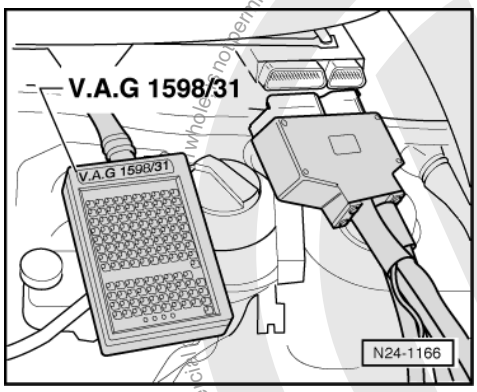

If no voltage is present:
- -> Connect test box V.A.G 1598/31 to control unit wiring harness. The engine control unit remains disconnected.

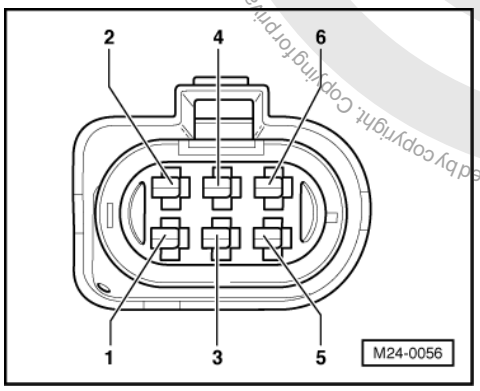

Protected by copyright. Copying for private or commercial purposes, in whole or in part, is not permitted unless authorised by Volkswagen AG. Volkswagen AG does not guarantee or accept any liability with respect to the correctness of information in this document. Copyright by Volkswagen AG.
satelettronica

- -> Check wiring for open circuit between test box and 6-pin connector using current flow diagram.
  Contact 1+socket 5
  Wire resistance: Max. 1.5 ω

If the specification is obtained:

- Check wiring from contact 2 to fuel pump relay (J17) using current flow diagram.

=> Current flow diagrams, Electrical fault finding and Fitting locations binder

2.3 - Checking Lambda probe heating for Lambda probe after catalyst

Special tools, workshop equipment, testers, measuring instruments and auxiliary items required

- Test box V.A.G 1598/31
- Hand multimeter V.A.G 1526 or multimeter V.A.G 1715
- Adapter set V.A.G 1594
- Current flow diagram

Check conditions

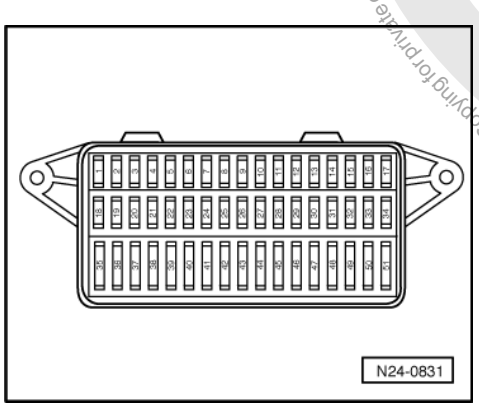

- -> Fuse No. 1 must be OK.
- The battery voltage must be at least 11.5 V.
- Fuel pump relay must be OK

Test sequence

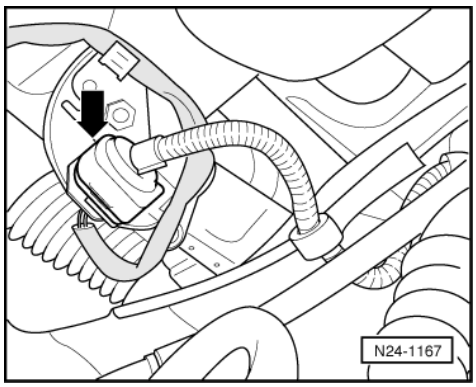

- -> Separate 4-pin connector to Lambda probe (G130) -arrow-.

Protected by copyright. Copying for private or commercial purposes, in part or whole, is not permitted unless authorised by Volkswagen AG. Volkswagen AG does not guarantee or accept any liability with respect to the correctness of information in this document. Copyright by Volkswagen AG.
satelettronica

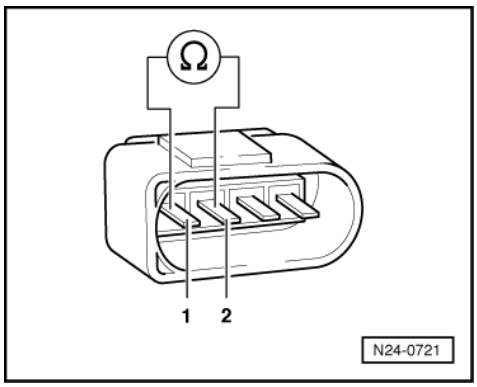

- -> Check probe heating for continuity at Lambda probe connector contacts 1 and 2.

Note:

The heater element resistance is approx. 1...5 ω at room temperature. Even slight increases in room temperature increase the resistance greatly.

If it is determined that probe heating has an open circuit:

- Renew Lambda probe 2 after catalyst (G130) => Page 55 , item 6 .

If probe heating has continuity:

Checking voltage supply

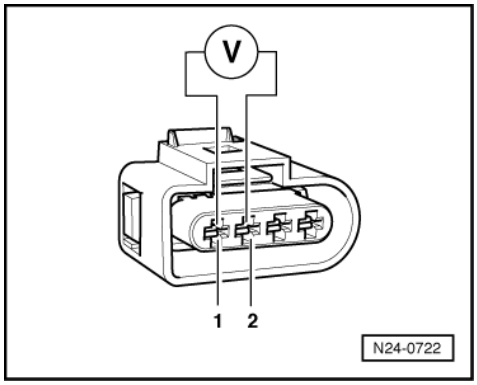

- Set multimeter to "Voltage measurement" range.
- -> Connect multimeter using aux. cables from V.A.G 1594 to measure voltage at contacts 1+2 (connector to engine control unit).
- Start engine and run at idling speed.

  Specification: 11.0...15.0 V

- Switch off ignition.

If no voltage is present:

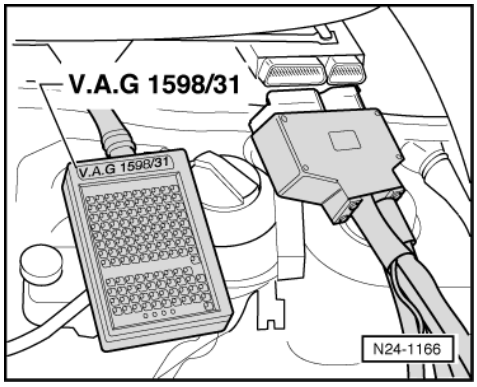

Protected by copyright. Copying for private or commercial purposes, in part or in whole, is not permitted unless authorised by Volkswagen AG. Volkswagen AG does not guarantee or accept any liability with respect to the correctness of information in this document. Copyright by Volkswagen AG.
satelettronica

- -> Connect test box V.A.G 1598/31 to control unit wiring harness. The engine control unit remains disconnected.

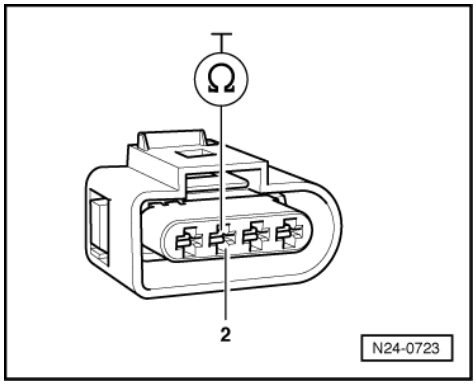

- -> Check wiring for open circuit between 4-pin connector contact 2 and socket 63
  Wire resistance: Max. 1.5 ω

If the specification is obtained:

- Check wire between 4 pin connector contact 1 and fuel pump relay (J17) for open circuit using current flow diagram.
  Wire resistance: max. 1.5 ω

2.4 - Checking throttle valve control part

Components of throttle valve control part (J338):
Throttle valve drive (G186), angle sender 1 for throttle valve drive (G187) and angle sender 2 for throttle valve drive (G188).

Note:

If the throttle valve control part is replaced, the new control part must without fail be adapted to the engine control unit => Page 128 .

Special tools, workshop equipment, testers, measuring instruments and auxiliary items required

- Test box V.A.G 1598/31
- Hand multimeter V.A.G 1526 or multimeter V.A.G 1715
- Adapter set V.A.G 1594
- Current flow diagram

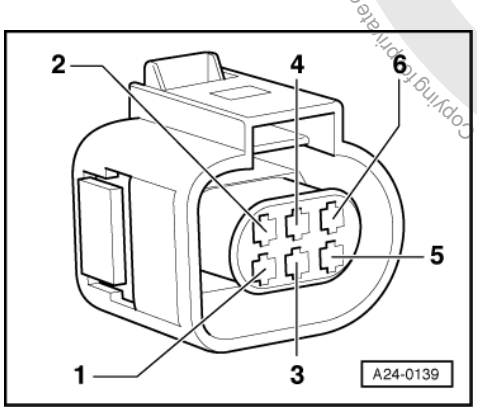

Test sequence

- -> Pull the 6-pin connector off the throttle valve control part.
- Measure the resistance on throttle valve drive between the contacts 3 + 5

Protected by copyright. Copying for private or commercial purposes, in part or in whole, is not permitted unless authorised by Volkswagen AG. Volkswagen AG does not guarantee or accept any liability with respect to the correctness of information in this document. Copyright by Volkswagen AG.
satelettronica

Specification: 3...200 ω

If the specification is not obtained:

- Replace throttle valve control part (J338).

If the specification is obtained:

- Check voltage supply of throttle valve control part and wiring to control unit => Page 86 .

If the voltage supply and wiring is OK:

- Renew engine control unit => Page 126 .

Checking voltage supply and wiring to control unit

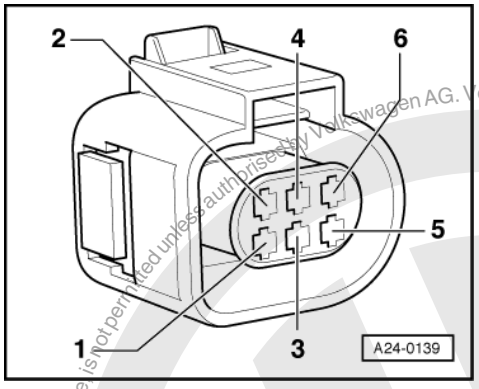

- -> Pull the 6-pin connector off the throttle valve control part.
- Connect the multimeter to measure voltage to contacts 2 + 6 of the connector.
- Switch on ignition.
  Specification: min. 4.5 V
- Switch off ignition.
- Connect the multimeter to measure voltage to contact 2 of the connector and earth.
- Switch on ignition.
  Specification: min. 4.5 V
- Switch off ignition.

If the specifications are not attained:

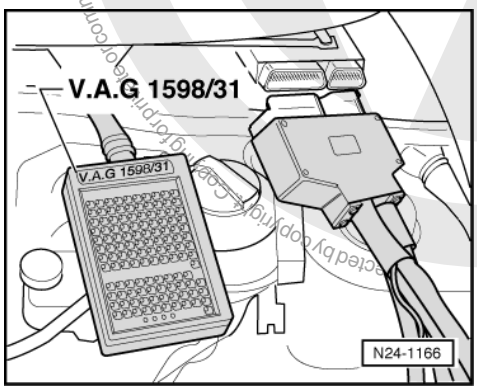

- -> Connect test box V.A.G 1598/31 to control unit wiring harness. The engine control unit remains disconnected.
- Check wiring for open circuit between test box and connector using current flow diagram:
  Contact 1+socket 92
  Contact 2+socket 83
  Contact 3+socket 117
  Contact 4+socket 84
  Contact 5+socket 118
  Contact 6+socket 91
  Wire resistance: Max 1.5 ω
- Additionally check wires for short to one another.

Copyright by Volkswagen AG. Volkswagen AG does not guarantee or accept any liability with respect to the correctness of information in this document. Copying or printing of this document or parts of it is not permitted unless authorised by Volkswagen AG. For commercial purposes only permitted with written consent.
satelettronica

- Additionally check the wiring for short to battery positive or earth.

If no fault is detected in the wiring:
- Check engine control unit voltage supply => Page 123 .

2.5 - Checking intake manifold pressure sender

Note:
Only gold-plated contacts may be used when servicing the sender connector contacts

Special tools, workshop equipment, testers, measuring instruments and auxiliary items required

- Fault reader V.A.G 1551 or vehicle system tester V.A.G 1552 with cable V.A.G 1551/3A
- Test box V.A.G 1598/31
- Hand multimeter V.A.G 1526 or multimeter V.A.G 1715
- Adapter set V.A.G 1594
- Current flow diagram

Test sequence

- Connect fault reader V.A.G 1551 (V.A.G 1552). Start engine and select "Address word" 01 of engine control unit. When doing this the engine must be running at idling speed.
  (Connecting fault reader and selecting engine control unit => Page 4 .)

-> Indicated on display:

```
Rapid data transfer      HELP
Select function XXX
```

- Press keys 0 and 8 for the function "Read measured value block" and confirm entry with Q key.

-> Indicated on display:

```
Read measured value block
Input display group number XXX
```

- Press keys 0, 0 and 2 for "Display group number 2" and confirm entry with Q key.

-> Indicated on display:
(1...4 = Display zones)

```
Read measured value block 2
     1      2      3      4
```

- Read off the displayed value for engine load in display zone 2 and note this value.
- Briefly open throttle valve. The engine load value must increase briefly.

If the display shows constantly 0 % or 99 %:

Display	Cause	Continuation of check
0 %	Open circuit or short to earth	=> Page 88
99 %	Short to positive	=> Page 89

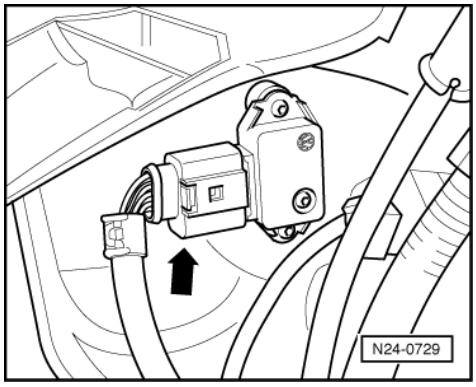

Volkswagen AG. Volkswagen AG does not guarantee or accept any liability with respect to the correctness of information in this document. Copyright by Volkswagen AG.
Protected by copyright. Copying or distribution is not permitted without authorisation.
satelettronica

Continuation of check when display 0%:

- -> Pull 4 pin connector off intake manifold pressure sender (G71) with intake air temperature sender (G42) -arrow- (engine can stall).

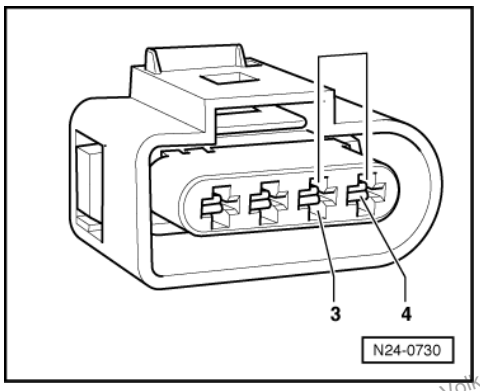

- -> Bridge connector contacts 3+4 with aux. cables from V.A.G 1594 and observe display.

If the display jumps to 99 %:

- Press ⇒key.
- Press keys 0 and 6 for the function "End output" and confirm entry with the Q key.
- Switch off ignition.
- Renew the intake manifold pressure sender (G71) with intake air temperature sender (G42) => Page 70 , item 11 .

If the display remains at 0 %:

- Press ⇒key.

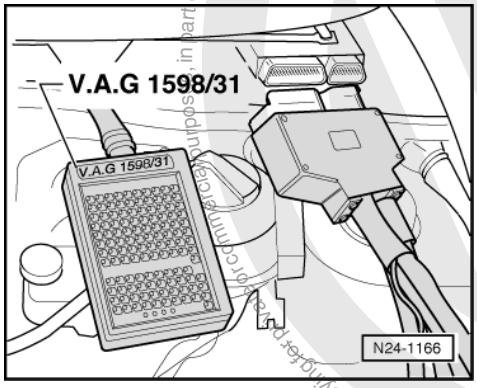

- Press keys 0 and 6 for the function "End output" and confirm entry with the Q key.
- Switch off ignition.
- Remove left plenum chamber cover.
- -> Connect test box V.A.G 1598/31 to control unit wiring harness. The engine control unit remains disconnected.

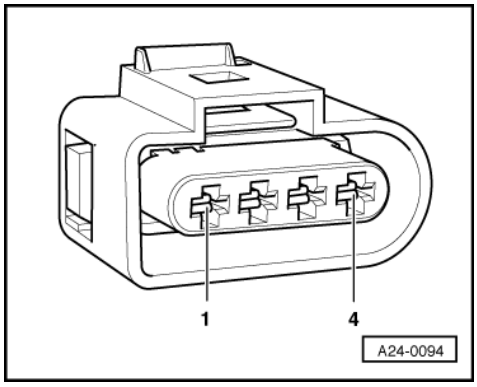

Protected by copyright. Copyright by Volkswagen AG. Volkswagen AG does not guarantee or accept any liability with respect to the correctness of information in this document. Copyright by Volkswagen AG. Reproduction, distribution or disclosure to third parties without express authorisation is not permitted unless authorised by Volkswagen AG, in part or in whole, is not permitted unless authorised by Volkswagen AG. Volkswagen AG does not guarantee or accept any liability with respect to the correctness of information in this document. Copyright by Volkswagen AG.
satelettronica

- -> Check wiring for open circuit between test box and connector using current flow diagram.
  Contact 3+socket 98
  Contact 4+socket 109
  Wire resistance: Max. 1.5 ω
- Additionally check wiring contact 4 for short to earth and to contact 1.
  Specification: ∞ω

If no fault is detected in the wiring:

- Replace engine control unit
  => Page 126 .

Continuation of check when display shows 99 %:

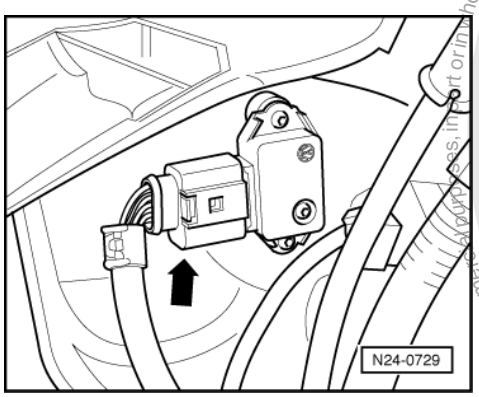

- -> Pull 4 pin connector off intake manifold pressure sender (G71) with intake air temperature sender (G42) -arrow- (engine can stall).

If the display jumps to 0 %:

- Press ⇒key.
- Press keys 0 and 6 for the function "End output" and confirm entry with the Q key.
- Switch off ignition.
- Renew the intake manifold pressure sender (G71) with intake air temperature sender (G42)
  => Page 70 , item 11 .

If the display remains at 99 %:

- Press the ⇒key.
- Press keys 0 and 6 for the function "End output" and confirm entry with the Q key.
- Switch off ignition.

- Remove left plenum chamber cover.
- Release connector from control unit and pull off.

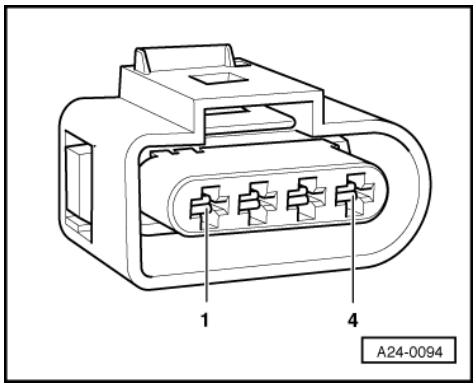

- -> Check wiring to control unit connector at 4 pin connector contact 4 for short to wire contact 3 and to battery positive.

Protected by copyright. Copyright by Volkswagen AG. Volkswagen AG does not guarantee or accept any liability with respect to the correctness of information in this document. Copyright by Volkswagen AG. Reproduction, in part or in whole, is not permitted unless authorised by Volkswagen AG.
satelettronica

Specification: ∞ω

If no fault is detected in the wiring:

- Replace engine control unit
  => Page 126 .

2.6 - Checking intake air temperature sender

Note:

Only gold-plated contacts may be used when servicing the sender connector contacts

Special tools, workshop equipment, testers, measuring instruments and auxiliary items required

- Fault reader V.A.G 1551 or vehicle system tester V.A.G 1552 with cable V.A.G 1551/3A
- Test box V.A.G 1598/31
- Hand multimeter V.A.G 1526 or multimeter V.A.G 1715
- Adapter set V.A.G 1594
- Current flow diagram
- Chilling spray (commercially available)

Test sequence

- Connect the fault reader V.A.G 1551 (V.A.G 1552). Then switch ignition on and select engine control unit with the "Address word" 01.
  (Connecting fault reader and selecting engine control unit => Page 4 .)

-> Indicated on display:

```
Rapid data transfer     HELP
Select function XXX
```

- Press keys 0 and 8 for the function "Read measured value block" and confirm entry with Q key.

-> Indicated on display:

```
Read measured value block
Input display group number XXX
```

- Press keys 0, 0 and 4 for "Display group number 4" and confirm entry with Q key.

-> Indicated on display:
(1...4 = Display zones)

```
Read measured value block     4
     1     2     3     4
```

- Read off intake air temperature value in display zone 4.

If the specification is not obtained:

- Perform check according to following table:

Display	Cause	Continuation of check
approx. -48 °C	Open circuit or short to positive	=> Page 91
approx. 143 °C	Short to earth	=> Page 92
Approx. ambient temperature1)	---	=> Page 93

Protected by copyright. Copyright by Volkswagen AG. Volkswagen AG does not guarantee or accept any liability with respect to the correctness of information in this document. Copyright by Volkswagen AG.
satelettronica

1) If a temperature is displayed which is below the ambient air temperature of the sender, check sender wiring for transfer resistances. Note when doing this that sender is heated from external sources, e.g. radiated heat when engine is not running.

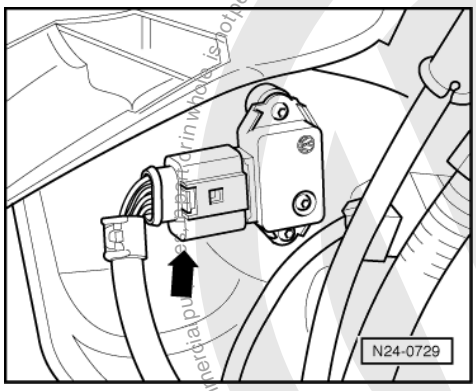

Continuation of check when display reads approx. -48 °C:

- -> Pull 4 pin connector off intake air temperature sender (G42) with intake manifold pressure sender (G71) -arrow-.

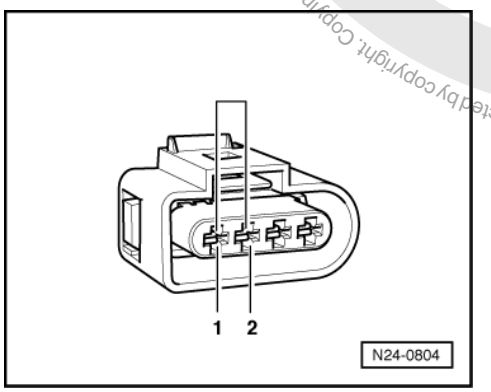

- -> Bridge connector contacts 1+2 using aux. cables from V.A.G 1594 and observe display.

If display jumps to approx. 143 °C:

- Press ⇒key.
- Press keys 0 and 6 for the function "End output" and confirm entry with the Q key.
- Switch off ignition.
- Renew the intake manifold pressure sender (G71) with intake air temperature sender (G42) => Page 70 , item 11 .

If display remains at approx. -48 °C:

- Press ⇒key.

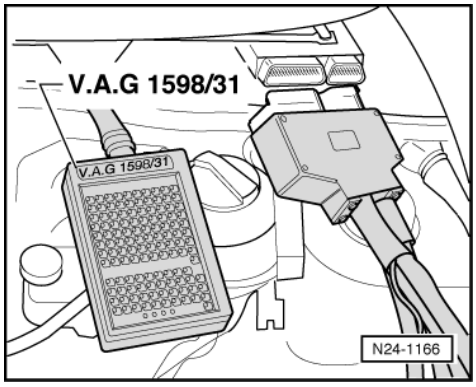

satelettronica

- Press keys 0 and 6 for the function "End output" and confirm entry with the Q key.
- Switch off ignition.
- Remove left plenum chamber cover.
- -> Connect test box V.A.G 1598/31 to control unit wiring harness. The engine control unit remains disconnected.

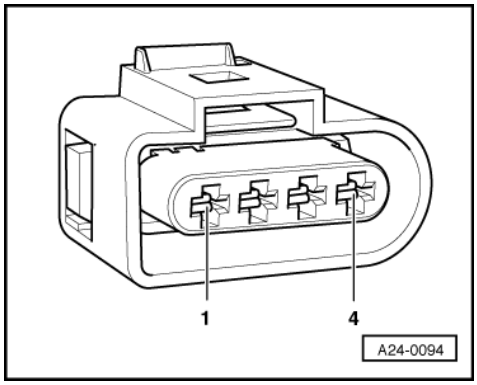

- -> Check the wiring for open circuit between test box and 4-pin connector using current flow diagram.
  Contact 1+socket 108
  Contact 2+socket 85
  Wire resistance: Max. 1.5 ω
- Check wiring additionally for short circuit to battery positive.
  Specification: ∞ω

If no fault is detected in the wiring:

- Renew the intake manifold pressure sender (G71) with intake air temperature sender (G42)
  => Page 70 , item 11 .

Continuation of check when display reads approx. 143 °C:

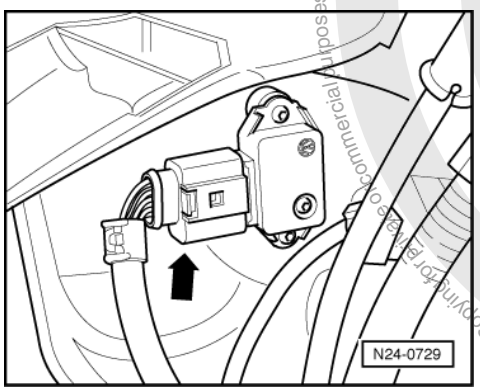

- -> Pull 4 pin connector off intake air temperature sender (G42) with intake manifold pressure sender (G71) -arrow-.

If display jumps to approx. -48 °C:

- Press ⇒key.
- Press keys 0 and 6 for the function "End output" and confirm entry with the Q key.
- Switch off ignition.
- Renew the intake manifold pressure sender (G71) with intake air temperature sender (G42)
  => Page 70 , item 11 .

If display remains at approx. 143 °C:

- Press ⇒key.
- Press keys 0 and 6 for the function "End output" and confirm entry with the Q key.

satelettronica

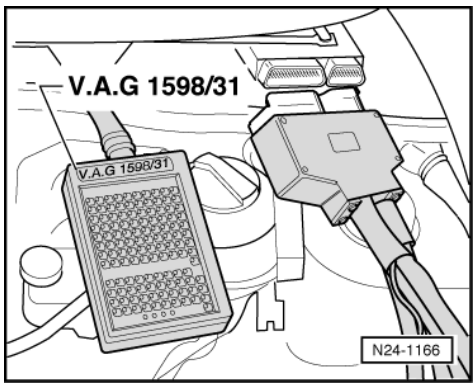

- Switch off ignition.
- Remove left plenum chamber cover.
- -> Connect test box V.A.G 1598/31 to control unit wiring harness. The engine control unit remains disconnected.

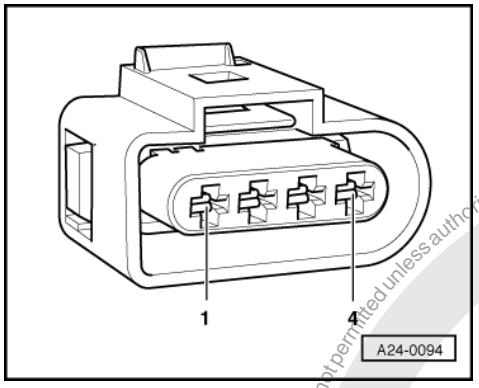

- -> Check the wiring for open circuit between test box and 4-pin connector using current flow diagram.
  Contact 1+socket 108
  Contact 2+socket 85
  Wire resistance: Max. 1.5 ω
- Check wiring additionally for short circuit to battery positive.
  Specification: ∞ω

If no fault is detected in the wiring:

- Renew the intake manifold pressure sender (G71) with intake air temperature sender (G42) => Page 70 , item 11 .

Continuation of check when display = ambient temperature:

Functional check of sender

- Remove air cleaner => Page 78 , Fig. 3 .

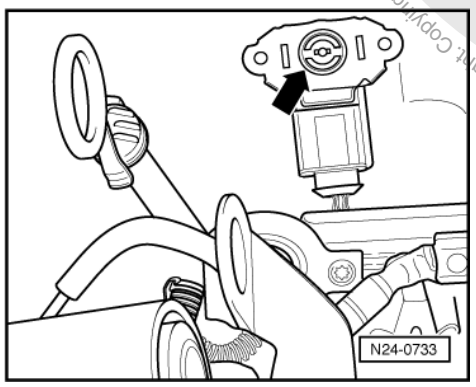

Protected by copyright. Copying for private or commercial purposes, in part or in whole, is not permitted unless authorised by Volkswagen AG. Volkswagen AG does not guarantee or accept any liability with respect to the correctness of information in this document. Copyright by Volkswagen AG.
satelettronica

- -> Remove intake air temperature sender together with intake manifold pressure sender (connector remains connected).
- Note intake air temperature value in display zone 4.
- Spray sender with commercial chilling agent whilst observing the temperature value. The temperature value must
  decrease.
- Press ⇒key.
- Press keys 0 and 6 for the function "End output" and confirm entry with the Q key.
- Switch off ignition.

If the specification is not obtained:

- Renew the intake manifold pressure sender (G71) with intake air temperature sender (G42)
  => Page 70 , item 11 .

2.7 - Checking coolant temperature sender

Special tools, workshop equipment, testers, measuring instruments and auxiliary items required

- Fault reader V.A.G 1551 or vehicle system tester V.A.G 1552 with cable V.A.G 1551/3A
- Test box V.A.G 1598/31
- Hand multimeter V.A.G 1526 or multimeter V.A.G 1715
- Adapter set V.A.G 1594
- Current flow diagram

Test sequence

- Connect the fault reader V.A.G 1551 (V.A.G 1552). Then switch ignition on and select engine control unit with the "Address word" 01.
  (Connecting fault reader and selecting engine control unit => Page 4 .)

-> Indicated on display:

```
Rapid data transfer      HELP
Select function XXX
```

- Press keys 0 and 8 for the function "Read measured value block" and confirm entry with Q key.

-> Indicated on display:

```
Read measured value block
Input display group number XXX
```

- Press keys 0, 0 and 1 for "Display group number 1" and confirm entry with Q key.

-> Indicated on display:
(1...4 = Display zones)

```
Read measured value block      1
     1     2     3     4
```

- Note coolant temperature value in display zone 2.

Display	Cause	Continuation of check
-40 °C	Open circuit or short to positive	=> Page 95
129 °C	Short to earth	=> Page 96

Protected by copyright. Copying for private or commercial purposes, in part or in whole, is not permitted unless authorised by Volkswagen AG. Volkswagen AG does not guarantee or accept any liability with respect to the correctness of information in this document. Copyright by Volkswagen AG.
satelettronica

Display	Cause	Continuation of check
Approx. coolant temperature1)	---	Only if sporadic faults have been detected:2) => Page 97

1) If a temperature is displayed which deviates greatly from the ambient temperature of the sender, check sender wiring for transfer resistances.

2) Check is only possible when the engine is cold.

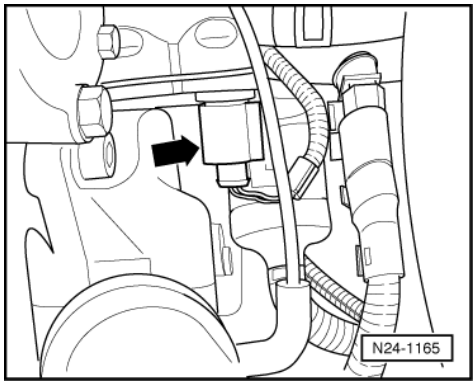

Continuation of check when display shows -40 °C:

- -> Pull the 4 pin connector off coolant temperature sender (G62) with coolant temperature gauge sender (G2) -arrow-.

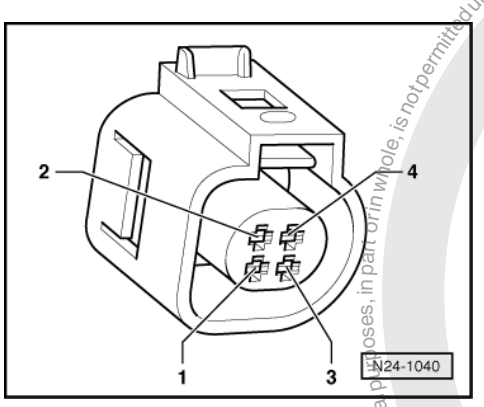

- -> Bridge connector contacts 3+4 using aux. cables from V.A.G 1594 and observe display.

Display jumps to 129 °C:

- Press ⇒key.
- Press keys 0 and 6 for the function "End output" and confirm entry with the Q key.
- Switch off ignition.
- Replace coolant temperature sender (G62) with coolant temperature gauge sender (G2) =>Page 64 , item 21 .

If the display remains at -40 °C:

- Press ⇒key.

Protected by copyright. Copying for private or commercial purposes, in part or in whole, is not permitted unless authorised by Volkswagen AG. Volkswagen AG does not guarantee or accept any liability with respect to the correctness of information in this document. Copyright by Volkswagen AG.
satelettronica

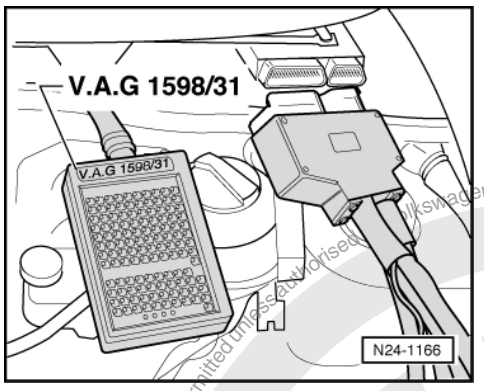

- Press keys 0 and 6 for the function "End output" and confirm entry with the Q key.
- Switch off ignition.
- Remove left plenum chamber cover.
- -> Connect test box V.A.G 1598/31 to control unit wiring harness. The engine control unit remains disconnected.

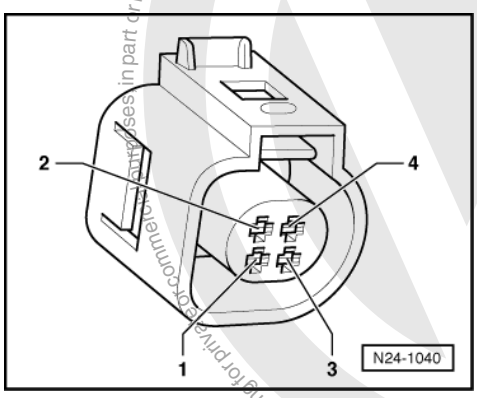

- -> Check the wiring for open circuit between test box and 4-pin connector using current flow diagram.
  Contact 3+socket 93
  Contact 4+socket 108
  Wire resistance: Max. 1.5 ω
- Check wiring additionally for short circuit to battery positive.
  Specification: ∞ω

If no fault is detected in the wiring:

- Replace coolant temperature sender (G62) with coolant temperature gauge sender (G2) =>Page 64 , item 21 .

Continuation of check when display shows 129 °C:

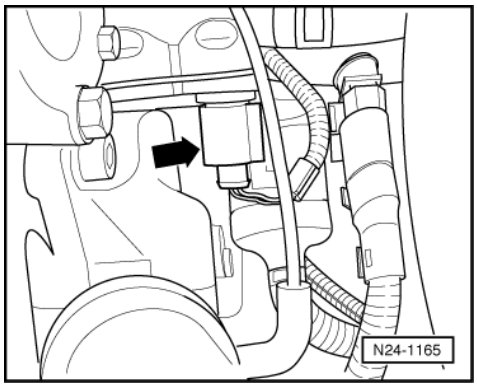

- -> Pull the 4 pin connector off coolant temperature sender (G62) with coolant temperature gauge sender (G2) -arrow-.

Copyright by Volkswagen AG. Volkswagen AG does not guarantee or accept any liability with respect to the correctness of information in this document.
satelettronica

If the display jumps to -40 °C:

- Press ⇒key.
- Press keys 0 and 6 for the function "End output" and confirm entry with the Q key.
- Switch off ignition.
- Replace coolant temperature sender (G62) with coolant temperature gauge sender (G2) =>Page 64 , item 21 .

Display jumps to 129 °C:

- Press ⇒key.
- Press keys 0 and 6 for the function "End output" and confirm entry with the Q key.

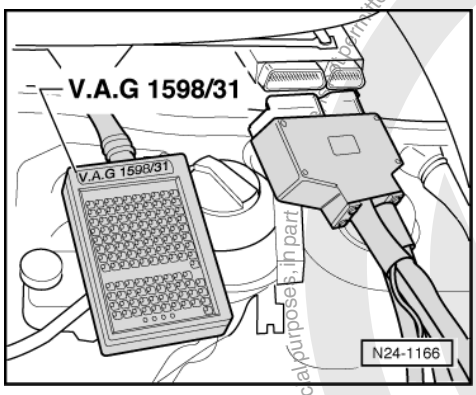

- Switch off ignition.
- Remove left plenum chamber cover.
- -> Connect test box V.A.G 1598/31 to control unit wiring harness. The engine control unit remains disconnected.

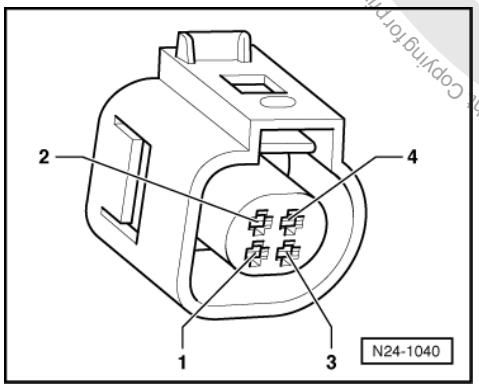

- -> Check the wiring for open circuit between test box and 4-pin connector using current flow diagram.
  Contact 3+socket 93
  Contact 4+socket 108
  Wire resistance: Max. 1.5 ω
- Check wiring additionally for short circuit to battery positive.
  Specification: ∞ω

If no fault is detected in the wiring:

- Replace coolant temperature sender (G62) with coolant temperature gauge sender (G2) =>Page 64 , item 21 .

Continuation of check when display = coolant temperature:

Test conditions

- Engine must be cold.

Protected by copyright. Copying for private or commercial purposes, in part or in whole, is not permitted unless authorised by Volkswagen AG. Volkswagen AG does not guarantee or accept any liability with respect to the correctness of information in this document. Copyright by Volkswagen AG.
satelettronica

Functional check of sender

- Connect fault reader V.A.G 1551 (V.A.G 1552). Start engine and select "Address word" 01 of engine control unit. When doing this the engine must be running at idling speed.
  (Connecting fault reader and selecting engine control unit => Page 4 .)

-> Indicated on display:

```
Rapid data transfer      HELP
Select function XXX
```

- Press keys 0 and 8 for the function "Read measured value block" and confirm entry with Q key.

-> Indicated on display:

```
Read measured value block
Input display group number XXX
```

- Press keys 0, 0 and 1 for "Display group number 1" and confirm entry with Q key.

-> Indicated on display:
(1...4 = Display zones)

```
Read measured value block      1
     1      2      3      4
```

- Observe coolant temperature value in display zone 2, whilst engine is running. The temperature figure must increase uniformly and without interruption.

Notes:

- If the display on fault reader jumps by 2...5 °C, it is a control unit fault and not caused by a defective sender.
- If irregular engine running occurs in certain temperature ranges and the temperature figure does not increase without interruption, the temperature signal is temporarily interrupted and the sender must be renewed.

- Press ⇒key.
- Press keys 0 and 6 for the function "End output" and confirm entry with the Q key.
- Switch off ignition.

If the specification is not obtained:

- Replace coolant temperature sender (G62) with coolant temperature gauge sender (G2) =>Page 64 , item 21 .

2.8 - Checking engine speed sender

The engine speed sender (G28) is a speed and reference mark sender. If the speed signal fails when the engine is running, it can cause the engine to stall.

Special tools, workshop equipment, testers, measuring instruments and auxiliary items required

- Test box V.A.G 1598/31
- Hand multimeter V.A.G 1526 or multimeter V.A.G 1715
- Adapter set V.A.G 1594
- Current flow diagram

Test conditions

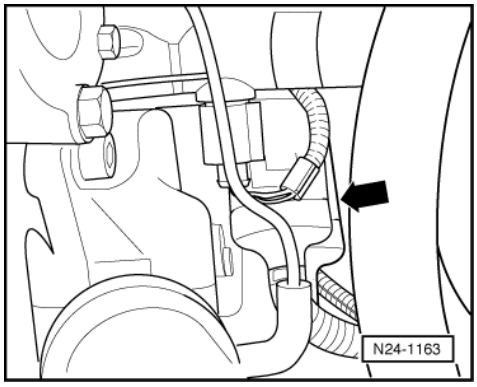

Copyright by Volkswagen AG. Volkswagen AG does not guarantee or accept any liability with respect to the accuracy of information in this document. Copying for private or commercial purposes, in part or in whole, is not permitted unless authorised by Volkswagen AG.
satelettronica

- The battery voltage must be at least 11.5 V.

Test sequence
- -> Detach black 3-pin connector to engine speed sender -arrow- (on thermostat housing).

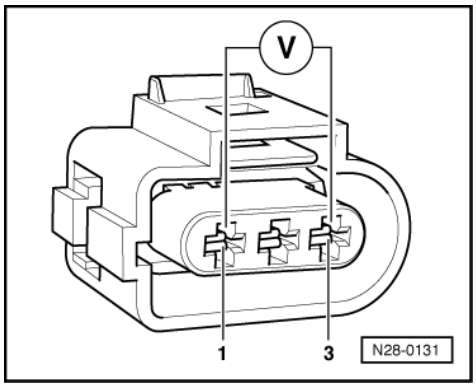

- -> Connect multimeter to measure voltage using aux. cables from V.A.G 1594 to contacts 1 (positive) and 3 (earth) on engine speed sender connector.
- Switch on ignition.
  Specification: min. 4.5 V
- Switch off ignition.

If no voltage is present:
- Remove left plenum chamber cover.

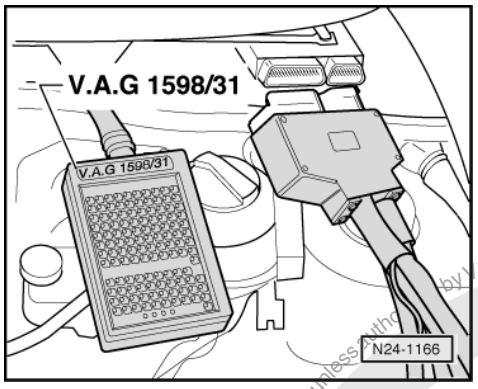

- -> Connect test box V.A.G 1598/31 to control unit wiring harness. The engine control unit remains disconnected.

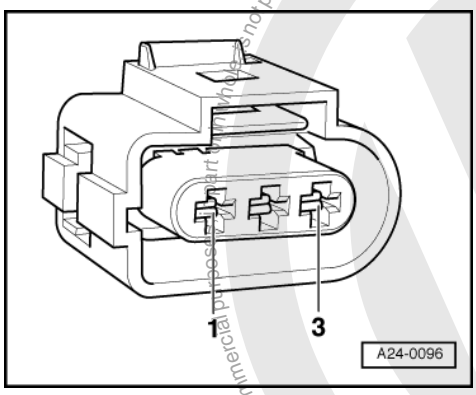

- -> Check wiring for open circuit between test box and 3-pin connector using current flow diagram.
  Contact 1+socket 87
  Contact 2+socket 82
  Contact 3+socket 108
  Wire resistance: Max. 1.5 ω
- Additionally check wires for short to one another.

Protected by copyright. Copyright by Volkswagen AG.
Commercial purposes or distribution is not permitted unless authorized by Volkswagen AG. Volkswagen AG does not guarantee or accept any liability with respect to the correctness of information in this document.
satelettronica

Specification: ∞ω

If no wiring fault is detected and voltage was present between contacts 1+3:

- Replace engine speed sender (G28)
  =>Page 61 , item 14 .

If no wiring fault is detected and no voltage was present between contacts 1+3:

- Replace engine control unit
  => Page 126 .

2.9 - Checking injectors

Checking activation

Special tools, workshop equipment, testers, measuring instruments and auxiliary items required

- Test box V.A.G 1598/31
- Hand multimeter V.A.G 1526 or multimeter V.A.G 1715
- Diode test lamp V.A.G 1527
- Adapter set V.A.G 1594
- Current flow diagram

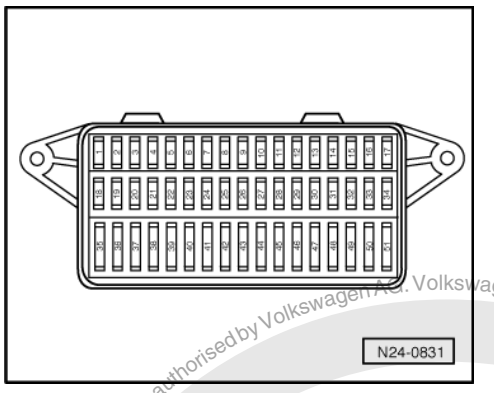

Check conditions

- -> Fuse No. 3 must be OK.
- Earth connection between engine (on gearbox bell housing) and body (below battery) OK.
- Earth connection in plenum chamber OK.
- The battery voltage must be at least 11.5 V.
- Engine speed sender must be OK, checking Page 98 .
- Hall sender must be OK, checking
  =>Page 145 .
- Fuel pump relay must be OK

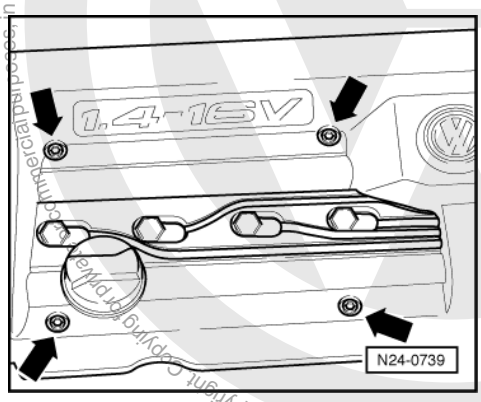

Protected by copyright. Copying for private or commercial purposes, in part or in whole, is not permitted unless authorised by Volkswagen AG. Volkswagen AG does not guarantee or accept any liability with respect to the correctness of information in this document. Copyright by Volkswagen AG.
satelettronica

Test sequence

- -> Remove cover above camshaft housing -arrows-.

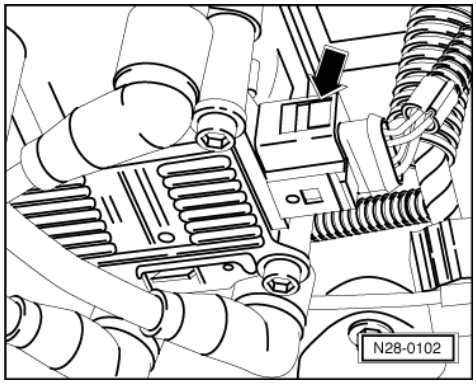

- -> Pull 4 pin connector off ignition transformer -arrow-.

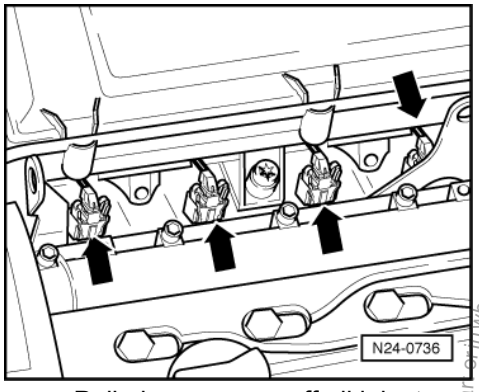

- -> Pull plug -arrows- off all injectors.

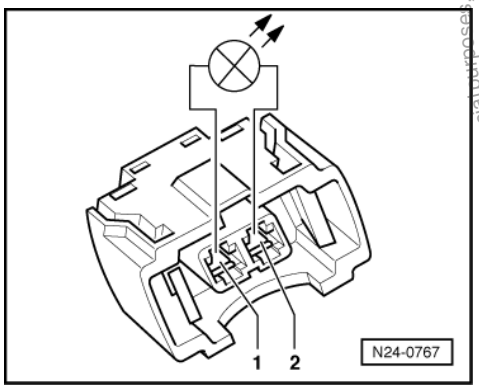

- -> Connect diode test lamp V.A.G 1527 using aux. cables from V.A.G 1594 to connector contacts of Cyl. 1.
- Operate the starter and check the voltage supply for No. 1 cylinder injector.
  The LED must light up
- Repeat check at the injector connectors for Cyls. 2...4.
- Switch off ignition.

If the LED does not light up on any cylinder:

satelettronica
Copyright by Volkswagen AG. Volkswagen AG does not guarantee or accept any liability with respect to the correctness of information in this document. Copyright by Volkswagen AG. Copying for private or commercial purposes, in part or in whole, is not permitted unless authorised by Volkswagen AG.

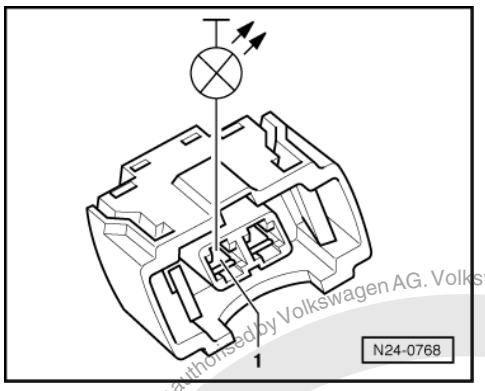

- -> Connect diode test lamp to Cyl. 1 connector, contact 1 and earth.
- Operate the starter and check the voltage supply for No. 1 cylinder injector.
  The LED must light up
- Repeat check at the injector connectors for Cyls. 2...4.

If the LED does not light up:

- Switch off ignition.
- Check wire between 2 pin connector contact 1 and fuel pump relay (J17) for open circuit according to current flow diagram.
  Wire resistance: max. 1.5 ω

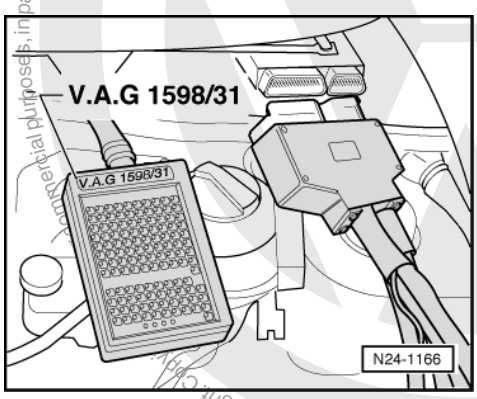

If the LED does not light up on one or several cylinders:

- Remove left plenum chamber cover.
- -> Connect test box V.A.G 1598/31 to control unit wiring harness. The engine control unit remains disconnected.

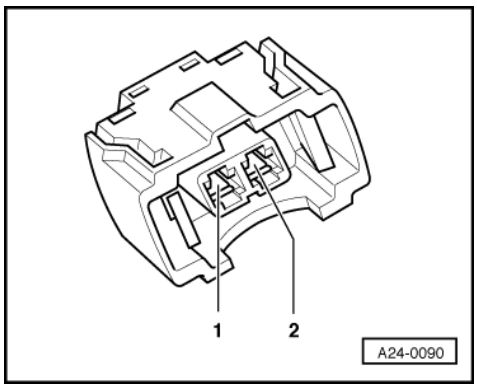

- -> Check wiring for open circuit between test box and 2-pin connectors of injectors using current flow diagram.
  Injector 1: Contact 2+socket 96
  Injector 2: Contact 2+socket 97
  Injector 3: Contact 2+socket 88
  Injector 4: Contact 2+socket 89

satelettronica

Wire resistance: Max.1.5 ω
- Additionally check wires for short to one another.
  Specification: ∞ω
- Check wiring between connector contacts 1 of injectors for open circuit to one another.
  Wire resistance: Max. 1.5 ω

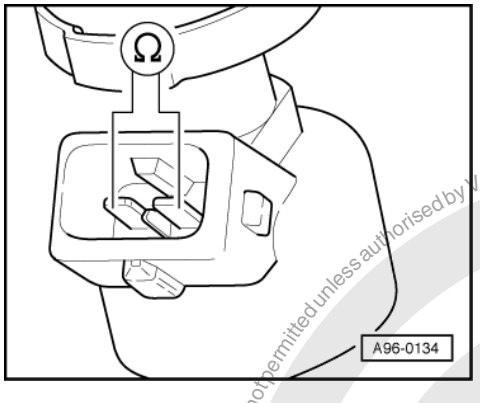

Checking resistance of injectors

Test sequence

- -> Check resistance of injectors individually
  Specification: 14.0...17.0 ω(at 20° C)

When the engine is warm the resistance will be approx. 4...6 ωhigher.

If the specification is not attained:

- Renew defective injector
  Page 73 , item 7.

Protected by copyright. Copying for private or commercial purposes, in part or in whole is not permitted unless authorised by Volkswagen AG. Volkswagen AG does not guarantee or accept any liability with respect to the correctness of information in this document. Copyright by Volkswagen AG.
satelettronica

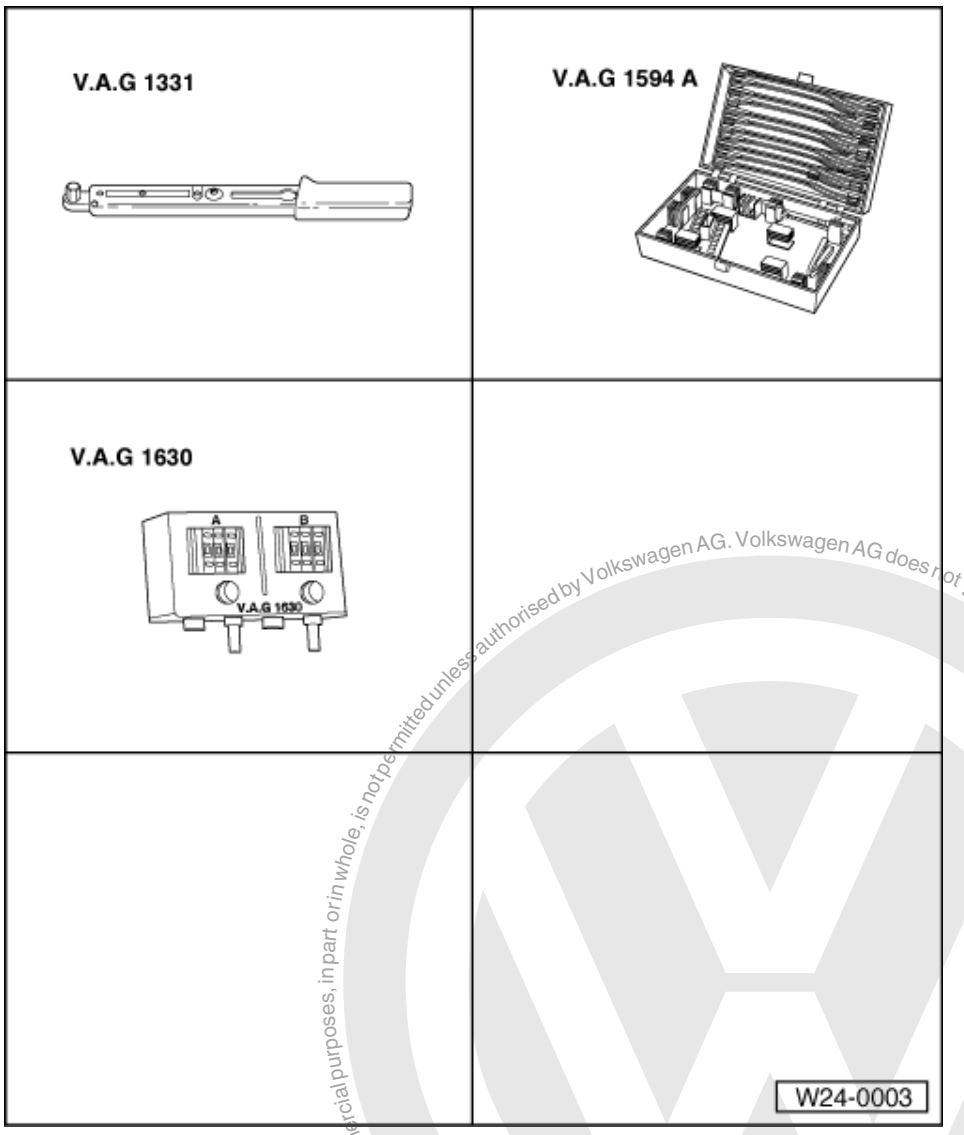

Checking spray pattern and for leaks

Special tools, workshop equipment, test and measuring appliances and auxiliary items required

- V.A.G 1331 Torque wrench (5...50 Nm)
- V.A.G 1594 A Adapter set
- V.A.G 1630 Digital potentiometer
- Measuring container

Test conditions

- The fuel pressure must be in order, checking
  => Page 107 , checking fuel pressure regulator and holding pressure.

Protected by copyright. Copying for private or commercial purposes, in part or in whole, is not permitted unless authorised by Volkswagen AG. Volkswagen AG does not guarantee or accept any liability with respect to the correctness of information in this document. Copyright by Volkswagen AG.
satelettronica

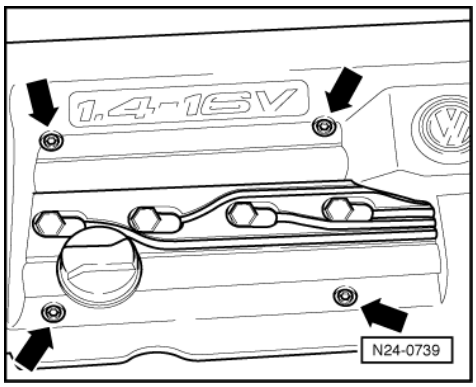

Test sequence

- -> Remove cover above camshaft housing -arrows-.
- Remove air cleaner => Page 78 , Fig. 3 .

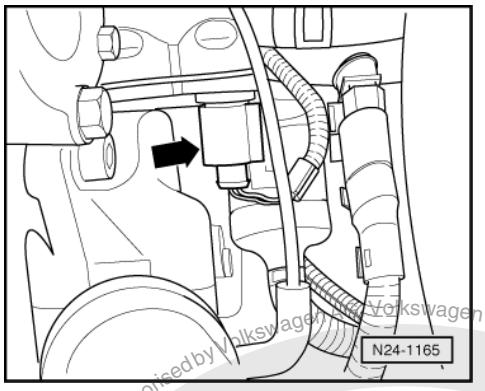

- -> Pull the 4 pin connector off coolant temperature sender (G62) with coolant temperature gauge sender (G2) -arrow-.

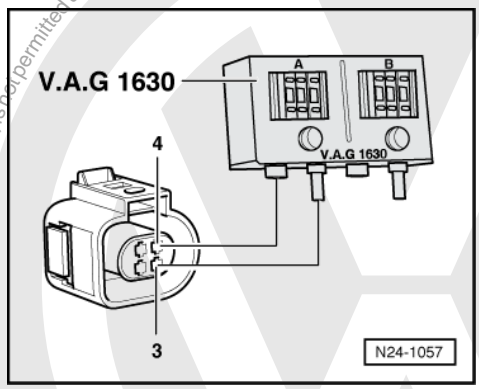

- -> Connect digital potentiometer V.A.G 1630 using aux. cables from V.A.G 1594 to connector contacts 1+3 and set connected side to 15 kω.
- Unclip the wiring harness for the injectors from intake manifold and thermostat housing.

Protected by copyright. Copying for private or commercial purposes, in part or in whole, is not permitted unless authorised by Volkswagen AG. Volkswagen AG does not guarantee or accept any liability with respect to the correctness of information in this document. Copyright by Volkswagen AG.
satelettronica

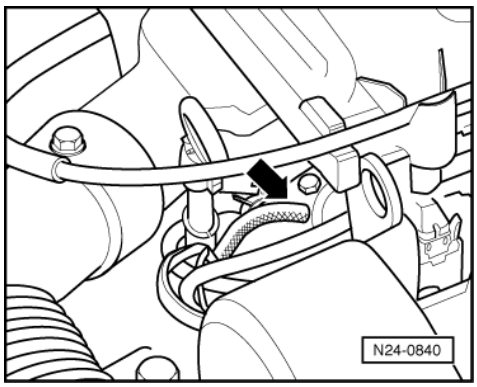

- -> Pull the vacuum hose off fuel pressure regulator -arrow-.
- Remove fuel rail complete with all injectors from intake manifold (fuel hoses remain connected)
  Page 59 , item 6 .

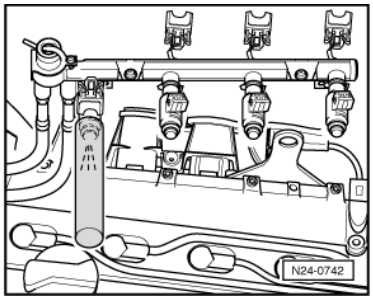

- -> Hold a small container under the injector to be checked and pull connectors off all other injectors.
- Have 2nd person operate starter. Injector must spray in pulses.
- Repeat check with other injectors ensuring that injector to be checked is only connected.
- Switch off ignition and afterwards check injectors for leaks. No more than
  2 drops/min
  may leak from each injector.

If the fuel loss is greater:

- Switch off ignition.
- Renew defective injector
  Page 73 , item 7 .

Perform installation of injectors in reverse order. When doing this note the following:

- Renew O-rings on all injectors and lightly moisten with clean engine oil.
- Fit fuel rail with secured injectors onto intake manifold and tighten evenly.

Protected by copyright. Copying for private or commercial purposes, in part or in whole, is not permitted unless authorised by Volkswagen AG. Volkswagen AG does not guarantee or accept any liability with respect to the correctness of information in this document. Copyright by Volkswagen AG.
satelettronica

2.10 - Checking fuel pressure regulator and holding pressure

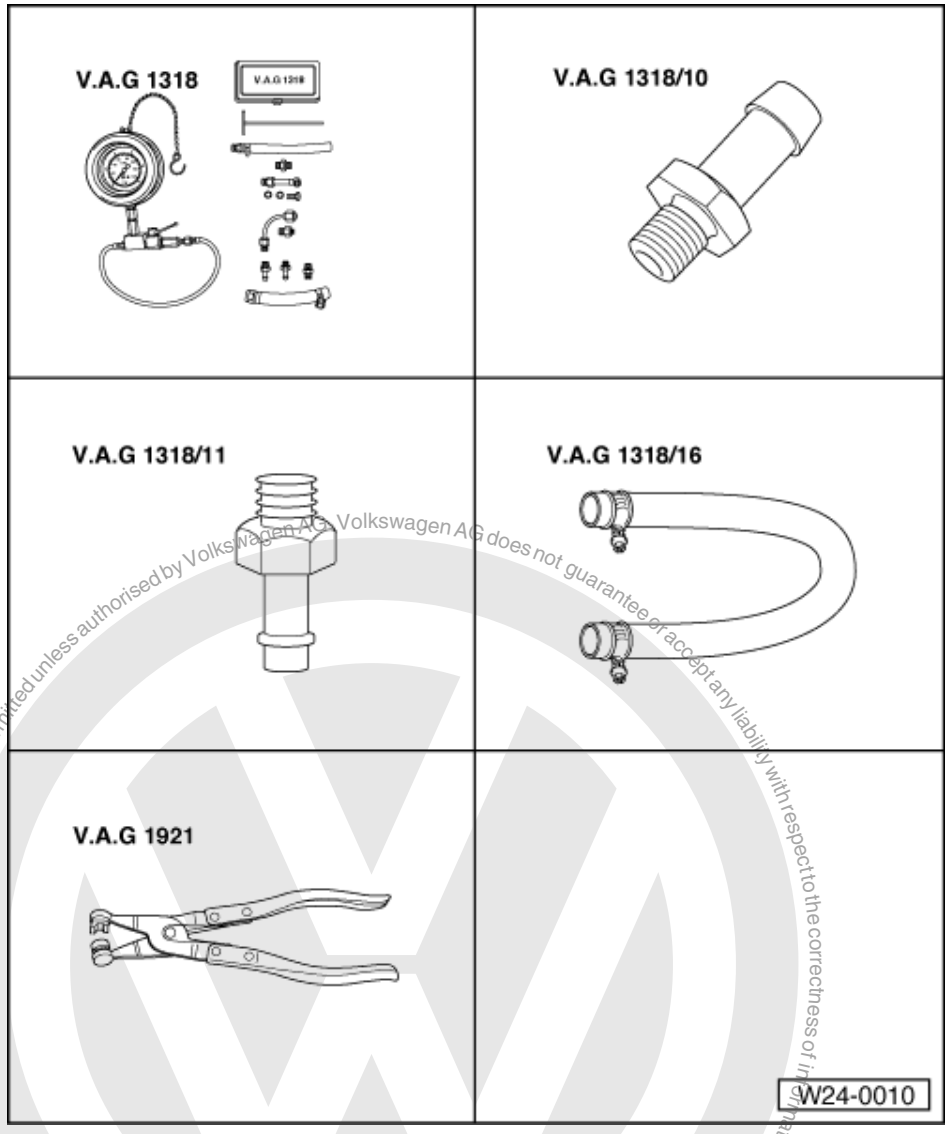

The fuel pressure regulator regulates the fuel pressure depending on intake manifold pressure.

The specification for the check is dependent upon the working pressure of the fuel pump. This is approx. 3.0 bar

Special tools, workshop equipment, test and measuring appliances and auxiliary items required

- V.A.G 1318 Pressure gauge
- V.A.G 1318/10 Adapter
- V.A.G 1318/11 Adapter
- V.A.G 1318/16 Hose adapter
- V.A.G 1921 Spring-type clip pliers

Protected by copyright. Copying for private or commercial purposes, in part or in whole, is not permitted unless authorised by Volkswagen AG. Volkswagen AG does not guarantee or accept any liability with respect to the correctness of information in this document. Copyright by Volkswagen AG.
satelettronica

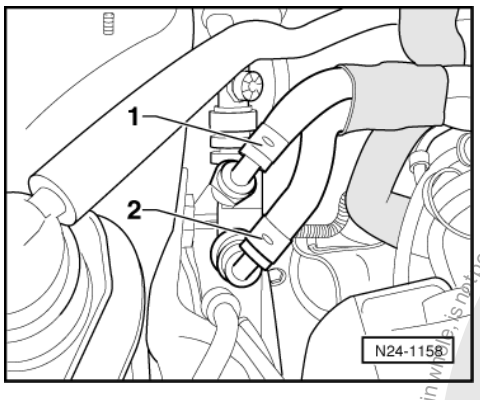

Test sequence

- -> Pull off the supply hose -1- (with white marking) and catch the fuel which runs out in a cloth.

Warning!
Fuel system is under pressure! Before opening the system place a cloth around the connection. Then release pressure by carefully loosening the connection.

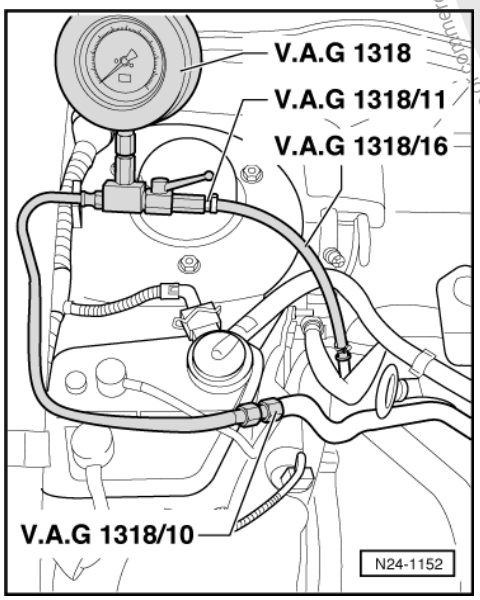

- -> Connect pressure gauge V.A.G 1318 with adapter V.A.G 1318/10 to supply hose -1- and with adapter V.A.G 1318/11 and hose adapter V.A.G 1318/16 to supply pipe.
- Open measured device cut-off tap. (The handle points in through-flow direction -arrow-).
- Start the engine and run at idling speed.
- Measure fuel pressure.
  Specification: Approx. 2.5 bar

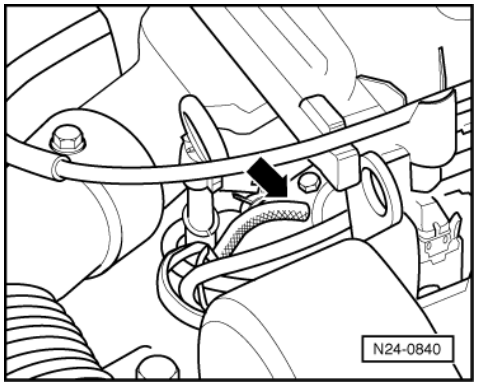

Protected by copyright. Copying for private or commercial purposes, in part or in whole, is not permitted unless authorised by Volkswagen AG. Volkswagen AG does not guarantee or accept any liability with respect to the correctness of information in this document. Copyright by Volkswagen AG.
satelettronica

- -> Pull vacuum hose off fuel pressure regulator -arrow-. The fuel pressure must increase to approx. 3.0 bar.
- Switch off ignition.

If the specification is not obtained:

- Check quantity supplied by fuel pump.

=> Rep. Gr. 20; Removing and installing parts of fuel system; checking fuel pump

If the specification is obtained:

- Check for leaks and holding pressure by observing pressure drop on gauge. After 10 minutes there must be a residual pressure of at least 2.0 bar.

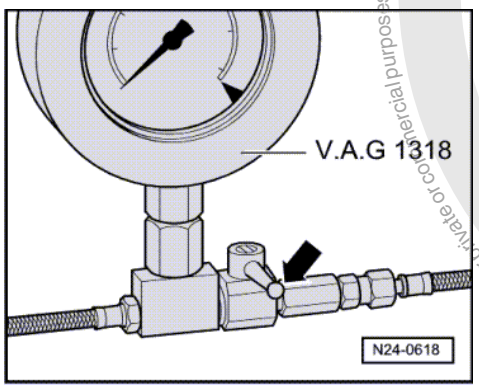

If the holding pressure drops below 2 bar:

- Start the engine and run at idling speed.
- -> Switch ignition off after the pressure has built-up. At the same time close pressure measured device cut-off tap (handle cross through-flow direction -arrow-).
- Observe pressure drop on gauge.

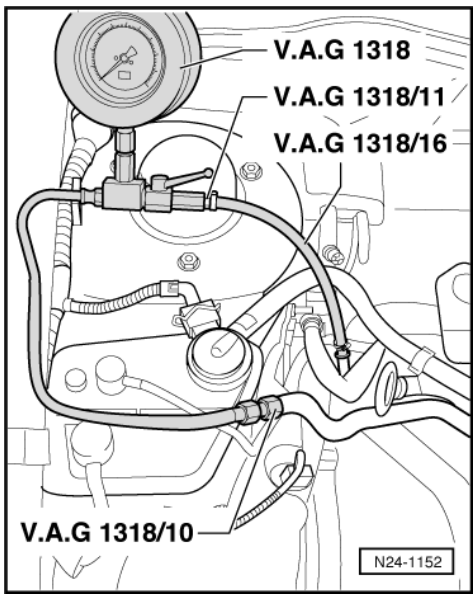

If the pressure does not drop:

- Check fuel pump non-return valve.

Protected by copyright. Copying for private or commercial purposes, in part or in whole, is not permitted unless authorised by Volkswagen AG. Volkswagen AG does not guarantee or accept any liability with respect to the correctness of information in this document. Copyright by Volkswagen AG.
satelettronica

=> Rep. Gr. 20; Removing and installing parts of fuel system; checking fuel pump

If the pressure drops again:

- -> Open pressure gauge V.A.G 1318 shut-off tap (handle in direction of flow).
- Start the engine and run at idling speed.

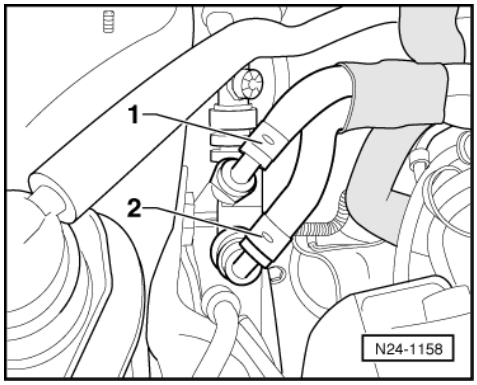

- -> Switch ignition off after the pressure has build-up. At the same time clamp-off the return hose (with blue marking) -2-.

If the pressure does not drop:

- Renew fuel pressure regulator
  =>Page 74 , item 11 .

If the pressure drops again:

- Check pipe connections, O-rings on fuel manifold and injectors for leaks.
- Check pressure gauge for leaks.

Note:

Before removing pressure gauge place a cloth around the connections to be loosened.

2.11 - Checking intake air system for leaks (unmetered air)

Checking with engine leak detector spray G 001 800 A1

Special tools, workshop equipment, testers, measuring instruments and auxiliary items required

- Fault reader V.A.G 1551 or vehicle system tester V.A.G 1552 with cable V.A.G 1551/3A
- Engine leak detector spray G 001 800 A1

Test conditions

- Coolant temperature must be at least 80 °C, =>display group 1, display zone 2.

Test sequence

Notes:

- The vacuum in the intake system will cause the leak detector spray to be drawn in with the unmetered air. The leak detector spray reduces the ignitability of the mixture. This leads to a drop in engine speed and to a change of Lambda probe voltage.
- The safety precautions listed on the container must be adhered to.

- Connect fault reader V.A.G 1551 (V.A.G 1552). Start engine and select "Address word" 01 of engine control unit. When doing this the engine must be running at idling speed.

Protected by copyright. Copyright by Volkswagen AG. Volkswagen AG does not guarantee or accept any liability with respect to the correctness of information in this document. Copyright by Volkswagen AG. Not permitted for commercial purposes, in part or in whole, is not permitted unless authorised by Volkswagen AG.
satelettronica

(Connecting fault reader and selecting engine control unit => Page 4 .)

-> Indicated on display:

```
Rapid data transfer      HELP
Select function XXX
```

- Press keys 0 and 8 for the function "Read measured value block" and confirm entry with Q key.

-> Indicated on display:

```
Read measured value block
Input display group number XXX
```

- Press keys 0, 3 and 3 for "Display group number 33" and confirm entry with Q key.

-> Indicated on display:
(1...4 = Display zones)

```
Read measured value block     33
     1     2     3     4
```

- Observe Lambda probe voltage in display zone 2.
- Systematically spray parts of the intake system with engine leak detector spray.

If the engine speed drops or the Lambda probe voltage changes:

- Press ⇒key.
- Press keys 0 and 6 for the function "End output" and confirm entry with the Q key.
- Switch off ignition.
- Check sprayed areas of intake system for leaks and rectify if necessary.

Engine speed or Lambda probe voltage does not change:

- Press ⇒key.

- Press keys 0 and 6 for the function "End output" and confirm entry with the Q key.
- Switch off ignition.

2.12 - Checking intake air preheating

Special tools, workshop equipment, testers, measuring instruments and auxiliary items required

◆ Chilling spray (commercially available)

Checking regulating flap

- Remove air cleaner intake support.

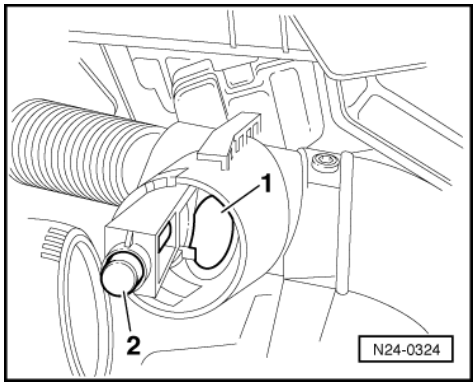

satelettronica

- -> Check control flap position -1-.
  - Above +23 °C flap must close warm air connection
  - Below +10 °C flap opens warm air connection

Note:

The function of the thermo element -2- can be checked easily by spraying with a commercial chilling agent.

3 - Checking functions

3.1 - Checking functions

3.2 - Idling check

Notes:

- Idling speed, ignition timing and CO content not adjustable.
- The idling speed is regulated to specification by the throttle valve positioner in conjunction with the DIS function.
- CO content regulated by Lambda regulation. Faults in Lambda control are detected in self-diagnosis and stored in fault memory.

Special tools, workshop equipment, testers, measuring instruments and auxiliary items required

- Fault reader V.A.G 1551 or vehicle system tester V.A.G 1552 with cable V.A.G 1551/3

Check conditions

- Exhaust system between cylinder head and catalyst free of leaks
- Coolant temperature must be at least 80 °C, =>display group 04, display zone 3.
- All electrical consumers, e.g. lights and rear window heating must be switched off

- If the vehicle is equipped with an air conditioning system, this must be switched off.

Test sequence

- Connect fault reader V.A.G 1551 (V.A.G 1552). Start engine and select "Address word" 01 of engine control unit. When doing this the engine must be running at idling speed.
  (Connecting fault reader and selecting engine control unit => Page 4 .)
- Interrogate fault memory, if necessary, repair fault and then erase fault memory.
  => Page 7 , interrogating and erasing fault memory
- Then:
  - Leave fault reader V.A.G 1551 connected.
  - Continue running engine at idling speed.

-> Indicated on display:

```
Rapid data transfer     HELP
Select function XXX
```

- Press keys 0 and 4 for the function "Initiating basic settings" and confirm entry with Q key.

-> Indicated on display:

```
Basic setting
Input display group number XXX
```

- Press keys 0, 0 and 1 for "Display group number 1" and confirm entry with Q key.

-> Indicated on display:

Protected by copyright. Copying for private or commercial purposes, in part or in whole, is not permitted unless authorised by Volkswagen AG. Volkswagen AG does not guarantee or accept any liability with respect to the correctness of information in this document. Copyright by Volkswagen AG.
satelettronica

(1...4 = Display zones)

```
System in basic setting      1
     1     2     3     4
```

Note:

In the "System in basic setting" function the activated charcoal filter solenoid valve 1 (N80) is closed and the air conditioner compressor switched off.

- Check the adjustment conditions for basic setting in display zone 4:
  Specification: 11111111
  Significance of the numbers => Page 35
- Briefly increase engine speed (rev- up) and then allow engine to run at idling speed for 2 minutes.

Checking idling speed

- Change to display group 56 as follows:
- Press C key.
- Press keys 0, 5 and 6 for "Display group number 56" and confirm entry with Q key.

-> Indicated on display:
(1...4 = Display zones)

```
System in basic setting      56
     1     2     3     4
```

- Check the operating mode in display zone 4
  Specification: 00000
  (Significance => Page 49)
- Check the specified idling speed in display zone 2.
  Specification: 790 rpm
- Check idling speed in display zone 1.
  Specification: 640...930 rpm1)

1) Up-to-date specifications:

=> Exhaust emissions test binder

Note:

During idling check the activated charcoal filter solenoid valve and the air conditioner are switched off and the Lambda regulation learning procedure is initiated.

- Press ⇒key.
- Press keys 0 and 6 for the "End data transfer" function and confirm input with the Q key.

If the idling speed is not obtained:

- Adapt the engine control unit to the throttle valve control part => Page 128

- Carry out test drive.
- Again interrogate the control unit fault memory.
- Repeat the idling check.

If the specifications are not obtained again:

- Check throttle valve control part
  => Page 85 .
- Check the operating condition of engine
  => Page 122 .
- Check the intake air system for unmetered air
  => Page 110

Protected by copyright. Copyright by Volkswagen AG. Volkswagen AG does not guarantee or accept any liability with respect to the correctness of information in this document. Copyright by Volkswagen AG. Not permitted unless authorised by Volkswagen AG. Volkswagen AG does not guarantee or accept any liability with respect to the correctness of information in this document. Copyright by Volkswagen AG.
satelettronica

3.3 - Adapting idling speed

In exceptional circumstances e.g. customer complaints concerning droning noises, vibrations at idling speeds, it is permitted to adjust the idling speed slightly. But ensure, that the idling speed is not outside the range printed in the Exhaust emissions test binder, (if the speed is outside the tolerance range it is possible that the vehicle will fail the next exhaust emissions test).

Special tools, workshop equipment, testers, measuring instruments and auxiliary items required

- Fault reader V.A.G 1551 or vehicle system tester V.A.G 1552 with cable V.A.G 1551/3

Test conditions

- No fault stored in fault memory
- Coolant temperature must be at least 80 °C, =>display group 04, display zone 3.

Work sequence

- Connect fault reader V.A.G 1551 (V.A.G 1552). Start engine and select "Address word" 01 of engine control unit. When doing this the engine must be running at idling speed.
  (Connecting fault reader and selecting engine control unit => Page 4)

-> Indicated on display:

```
Rapid data transfer      HELP
Select function XXX
```

- Press keys 1 and 0 for the "Adaption" function and confirm input with the Q key.

-> Indicated on display:

```
Adaption
Feed in channel number XX
```

- Press keys 0 and 1 for channel number 1 and confirm input with the Q key.

-> Indicated on display:

```
Channel 1      Adaption xxx
xxx rpm     xxx rpm      Text      Text
```

- Change the specified speed in display zone 2 in jumps of 10 rpm with the following keys:
  V.A.G 1551: keys 1 and 3
  V.A.G 1552: keys ↑ and ↓

-> Indicated on display:

```
Channel 1      Adaption xxx
xxx rpm     xxx rpm      Text      Text
```

Note:

The idling speed must not be adjusted to outside the permissible idling speed range. The up-to-date figures for the idling speed can be found in:

=> Exhaust emissions test binder

- Confirm input by pressing Qkey.

-> Indicated on display:

```
Channel 1      Adaption xxx      Q
Store amended figure?
```

- Confirm entry by pressing Qkey.

-> Indicated on display:

satelettronica

```
Channel 1     Adaption xxx
Amended figure is stored
```

- Conclude adaption by pressing ⇒ button.
- Press keys 0 and 6 for the "End data transfer" function and confirm input with the Q key.
- Switch off ignition.

3.4 - Checking Lambda probe and Lambda regulation before catalyst

Special tools, workshop equipment, testers, measuring instruments and auxiliary items required

- Fault reader V.A.G 1551 or vehicle system tester V.A.G 1552 with cable V.A.G 1551/3
- Test box V.A.G 1598/31
- Hand multimeter V.A.G 1526 or multimeter V.A.G 1715
- Adapter set V.A.G 1594
- Current flow diagram

Check conditions

- Coolant temperature must be at least 80 °C, =>display group 04, display zone 3.
- Exhaust system between catalyst and cylinder head must be free of leaks

Functional check

- Connect fault reader V.A.G 1551 (V.A.G 1552). Start engine and select "Address word" 01 of engine control unit. When doing this the engine must be running at idling speed.
  (Connecting fault reader and selecting engine control unit => Page 4 .)

-> Indicated on display:

```
Rapid data transfer     HELP
Select function XXX
```

- Press keys 0 and 8 for the function "Read measured value block" and confirm entry with Q key.

-> Indicated on display:

```
Read measured value block
Input display group number XXX
```

- Press keys 0, 3 and 0 for the "Display group number 30" and confirm entry with Q key.

-> Indicated on display:
(1...4 = Display zones)

```
Read measured value block     30
     1     2     3     4
```

- Check Lambda regulation status before catalyst (display zone 1):
  Specification: 1 1 1

Significance of 3 digit number block in display zone 1:

Significance if display = 1			
1	2	3	
		1	Lambda regulation active
	1		Lambda probe operationally ready
1			Lambda probe heating on

Protected by copyright. Copying for private or commercial purposes, in part or in whole, is not permitted unless authorised by Volkswagen AG. Volkswagen AG does not guarantee or accept any liability with respect to the correctness of information in this document. Copyright by Volkswagen AG.
satelettronica

If the specification is not obtained:

- Check the Lambda probe heating before catalyst
  => Page 80 .

If the specification is obtained:

- Press ⇒key.
- Press keys 0 and 4 for the function "Initiating basic settings" and confirm entry with Q key.

-> Indicated on display:

```
Basic setting
Input display group number XXX
```

- Press keys 0, 3 and 4 for "Display group number 34" and confirm entry with Q key.

-> Indicated on display:
(1...4 = Display zones)

```
Read measured value block      34
     1      2      3      4
```

- Set engine speed to 2500...3500 rpm using speed regulator V.A.G 1788/10:
- Maintain this engine speed until "TEST ON" appears in
  display zone 4.
- Continue to maintain the same speed until
  specification "B1-P1 OK"
  appears in display zone 4.

If "B1-P1 n.OK"
appears in display zone 4,

- Press ⇒key.
- Press keys 0 and 8 for the function "Read measured value block" and confirm entry with Q key.

-> Indicated on display:

```
Read measured value block
Input display group number XXX
```

- Press keys 0, 3 and 3 for "Display group number 33" and confirm entry with Q key.

-> Indicated on display:
(1...4 = Display zones)

```
Read measured value block 33
     1      2      3      4
```

- Observe Lambda regulation in display zone 1. The display must fluctuate at least 2 % in the range
  -10.0...10.0 %

- Check Lambda probe voltage in display zone 2. The voltage must
  fluctuate at least 20 times per minute
  in range of
  0... 1.0 V.

If the display in display zone 2 remains constantly at a value:

- Continue check according to following table.

Display	Cause	Continuation of check
Between 0.400... 0.500 V	Open circuit	=> Page 118 checking Lambda probe wiring
1.105 V	Short to positive	

Copyright by Volkswagen AG. Volkswagen AG does not guarantee or accept any liability with respect to the correctness of information in this document. Copying for private or commercial purposes, in part or in whole, is not permitted unless authorised by Volkswagen AG.
satelettronica

Display	Cause	Continuation of check
0.000 V	Short to earth	

If the Lambda regulation in display zone 1 does not fluctuate as stated:

- Press ⇒key.

- Press keys 0 and 6 for the "End data transfer" function and confirm input with the Q key.
- Carry out road test and burn Lambda probes clean and repeat check.

Observe the valid safety precautions when carrying out a road test => Page 78 .

If the the specifications in display zone 1 are not obtained even after a test drive, or the value does not fluctuate by at least 2 %:

- Replace Lambda probe before catalyst (G39).

Checking basic voltage

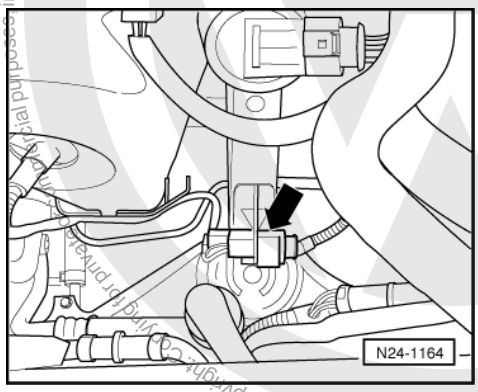

- -> Separate the 6-pin connector (black) to Lambda probe before catalyst (G39).

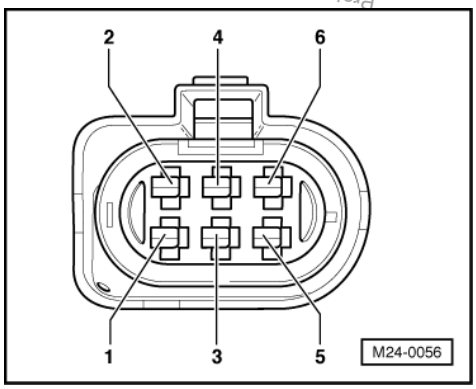

- -> Connect multimeter with aux. cables from V.A.G 1594 to measure voltage at contacts 3+4 (connector to engine control unit).
- Switch on ignition and measure basic voltage.
  Specification: 0.40...0.50 V
- Switch off ignition.

If the specification is not obtained:

- Check Lambda probe wiring
  => Page 118

If the specification is obtained:

- Replace Lambda probe before catalyst (G39).

satelettronica

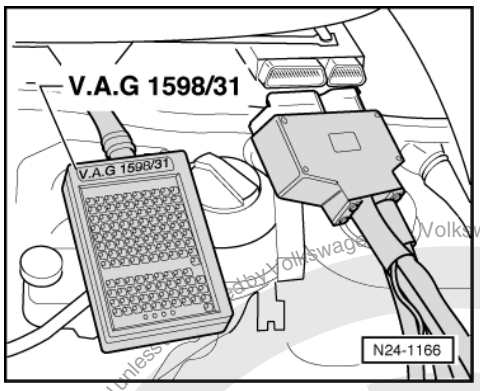

Checking Lambda probe wiring

- Remove left plenum chamber cover.
- -> Connect test box V.A.G 1598/31 to control unit wiring harness. The engine control unit remains disconnected.

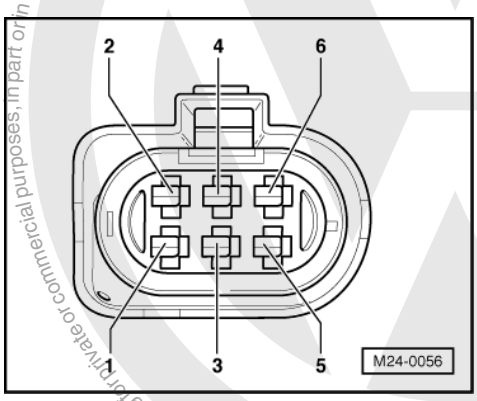

- -> Check wiring for open circuit between test box and 6-pin connector (to control unit) using current flow diagram.
  Contact 3+socket 52
  Contact 4+socket 71
  Contact 5+socket 70
  Contact 6+socket 51
  Wire resistance: Max 1.5 ω
- Check the wiring at connector contacts 3+4 for short circuit to contacts 1+2.

If no fault is detected in the wiring:

- Replace Lambda probe before catalyst (G39).

3.5 - Checking Lambda probe and Lambda regulation after catalyst

Special tools, workshop equipment, testers, measuring instruments and auxiliary items required

- Fault reader V.A.G 1551 or vehicle system tester V.A.G 1552 with cable V.A.G 1551/3
- Test box V.A.G 1598/31
- Hand multimeter V.A.G 1526 or multimeter V.A.G 1715
- Adapter set V.A.G 1594
- Current flow diagram

Check conditions

- Coolant temperature must be at least 80 °C, =>display group 04, display zone 3.

Volkswagen AG does not guarantee or accept any liability with respect to the correctness of information in this document. Copyright by Volkswagen AG. Protected by copyright. Copying for private or commercial purposes, in part or in whole, is not permitted unless authorised by Volkswagen AG.
satelettronica

- Exhaust system between catalyst and cylinder head must be free of leaks

Functional check

- Connect fault reader V.A.G 1551 (V.A.G 1552). Start engine and select "Address word" 01 of engine control unit. When doing this the engine must be running at idling speed.
  (Connecting fault reader and selecting engine control unit => Page 4 .)

-> Indicated on display:

```
Rapid data transfer      HELP
Select function XXX
```

- Press keys 0 and 8 for the function "Read measured value block" and confirm entry with Q key.

-> Indicated on display:

```
Read measured value block
Input display group number XXX
```

- Press keys 0, 3 and 0 for the "Display group number 30" and confirm entry with Q key.

-> Indicated on display:
(1...4 = Display zones)

```
Read measured value block     30
     1     2     3     4
```

- Check Lambda regulation status before catalyst (display zone 2):
  Specification: 1 1 0

Note:

The 3rd bit in display zone 2 will not be set to 1 until partial throttle (2500-4000 rpm) is reached.

Significance of 3 digit number block in display zone 2:

Significance if display = 1			
1	2	3	
		1	Lambda regulation active
	1		Lambda probe operationally ready
1			Lambda probe heating on

If the specification is not obtained:

- Check Lambda probe heating after catalyst
  => Page 80 .

If the specification is obtained:

- Press ⇒key.
- Press keys 0 and 4 for the function "Initiating basic settings" and confirm entry with Q key.

-> Indicated on display:

```
Basic setting
Input display group number XXX
```

- Press keys 0, 3 and 6 for "Display group number 36" and confirm entry with Q key.

-> Indicated on display:
(1...4 = Display zones)

```
System in basic setting     36
     1     2     3     4
```

satelettronica

- Apply brake and hold down brake pedal. The engine speed will be raised automatically. After a moment, the following appears in display zone 2:
  B1-P2 OK

If "B1-P2 n.OK"
appears in display zone 2,

- Check Lambda probe voltage 2 at idling speed (additive) in display zone 1.
  Specification: 0.000...1.000 V
- Continue check according to following table.

Display	Cause	Continuation of check
Between 0.400... 0.500 V	Open circuit	=> Page 118 checking Lambda probe wiring
1.105 V	Short to positive	
0.000 V	Short to earth	

If the Lambda regulation in display zone 1 does not fluctuate as stated:

- Press ⇒key.
- Press keys 0 and 6 for the "End data transfer" function and confirm input with the Q key.
- Carry out road test and burn Lambda probes clean and repeat check.

Observe the valid safety precautions when carrying out a road test => Page 78 .

If the the specifications in display zone 1 are not obtained even after a test drive, or the value does not fluctuate by at least 2 %:

- Renew Lambda probe 2 after catalyst (G130) => Page 55 , item 6 .

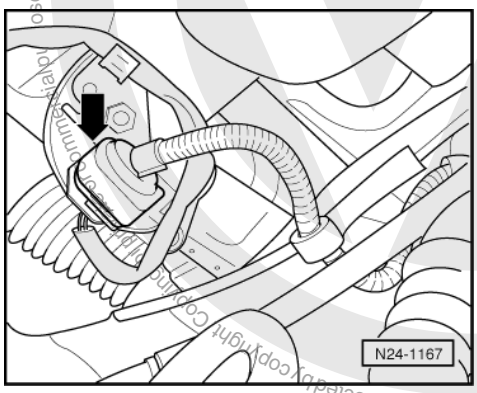

Checking basic voltage

- -> Separate 4-pin connector to Lambda probe (G130) -arrow-.

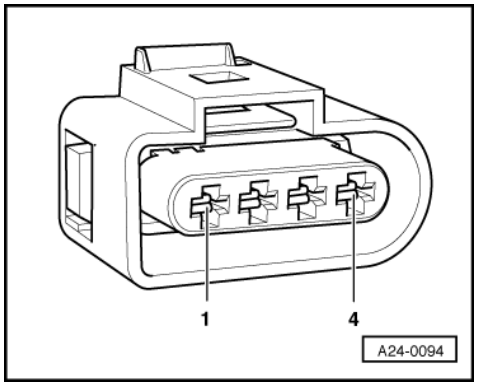

Protected by copyright. Copyright by Volkswagen AG.
Copyright by Volkswagen AG does not guarantee or accept any liability with respect to the correctness of information in this document.
Copyright by Volkswagen AG. Reproduction, in part or in whole, is only permitted with our express authorisation.
satelettronica

- -> Connect multimeter with aux. cables from V.A.G 1594 to measure voltage at contacts 3+4 (connector to engine control unit).
- Switch on ignition and measure basic voltage.
  Specification: 0.40...0.50 V
- Switch off ignition.

If the specification is obtained:

- Renew Lambda probe 2 after catalyst (G130) => Page 55 , item 6 .

Checking Lambda probe wiring

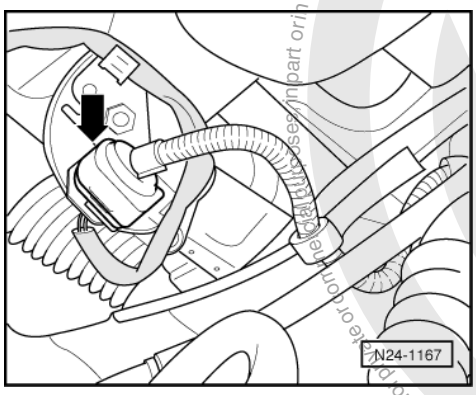

- -> Separate 4-pin connector to Lambda probe (G130) -arrow-.

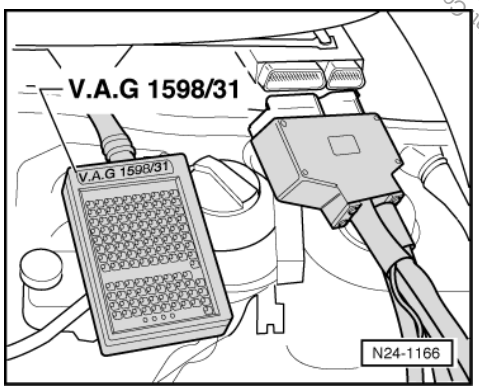

- Remove left plenum chamber cover.
- -> Connect test box V.A.G 1598/31 to control unit wiring harness. The engine control unit remains disconnected.

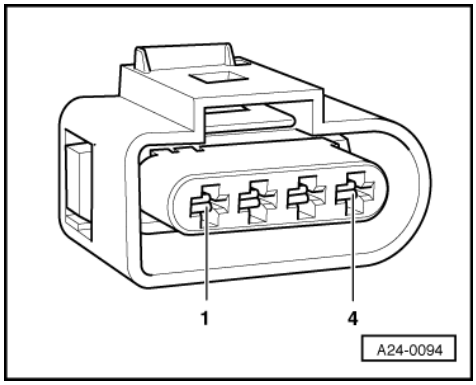

- -> Check wiring for open circuit between test box and 4-pin connector (to control unit) using current flow diagram.
  Contact 3+socket 68
  Contact 4+socket 69
  Wire resistance: Max. 1.5 ω

Protected by copyright. Copyright by Volkswagen AG. Volkswagen AG does not guarantee or accept any liability with respect to the correctness of information in this document. Copyright by Volkswagen AG. Volkswagen AG, is not permitted unless authorised by Volkswagen AG. Volkswagen AG does not guarantee or accept any liability with respect to the correctness of information in this document. Copyright by Volkswagen AG.
satelettronica

- Check the wiring at connector contacts 3+4 for short circuit to contacts 1+2.

If no fault is detected in the wiring:

- Renew Lambda probe 2 after catalyst (G130) => Page 55 , item 6 .

3.6 - Checking engine operating mode

Note:

Checks whether engine control unit recognises the engine operating modes idling, overrun, part throttle, enrichment, full throttle.

Special tools, workshop equipment, testers, measuring instruments and auxiliary items required

- Fault reader V.A.G 1551 or vehicle system tester V.A.G 1552 with cable V.A.G 1551/3

Test conditions

- Coolant temperature must be at least 80 °C, =>display group 04, display zone 3.

Test sequence

- Connect fault reader V.A.G 1551 (V.A.G 1552). Start engine and select "Address word" 01 of engine control unit. When doing this the engine must be running at idling speed.
  (Connecting fault reader and selecting engine control unit => Page 4 .)

-> Indicated on display:

```
Rapid data transfer      HELP
Select function XXX
```

- Press keys 0 and 8 for the function "Read measured value block" and confirm entry with Q key.

-> Indicated on display:

```
Read measured value block
Input display group number XXX
```

- Press keys 0, 0 and 5 for "Display group number 5" and confirm entry with Q key.

-> Indicated on display:
(1...4 = Display zones)

```
Read measured value block 5
     1     2     3     4
```

- Check whether the control unit recognises the operating mode (display zone 4):

- Idling:

  As long as the engine is running at idling speed idling must be displayed
  Display: Idling

- Overrun mode:

- Increase engine speed to above 3000 rpm.
- Close throttle abruptly.

  As long as the engine speed is above 1400 rpm overrun must be displayed
  Display: Overrun

Protected by copyright. Copying for private or commercial purposes, in part or in whole, is not permitted unless authorised by Volkswagen AG. Volkswagen AG does not guarantee or accept any liability with respect to the correctness of information in this document. Copyright by Volkswagen AG.
satelettronica

Note:

Below 1400 rpm idling speed will be recognised.

- Part throttle:

- Rev up evenly.

  As long as the engine is being revved up evenly, part throttle must be displayed
  Display: Part throt.

- Enrichment:

- Floor accelerator pedal (onto throttle valve stop).

  Acceleration enrichment must be displayed briefly
  Display: Enrichment

Observe the valid safety precautions when carrying out a road test=> Page 78 .

- Press ⇒key.
- Press keys 0 and 6 for the "End data transfer" function and confirm input with the Q key.

If the specifications are not attained:

- Interrogate fault memory, if necessary, repair any faults and then erase fault memory => Page 7 , interrogating and erasing fault memory.
- Check throttle valve control part
  => Page 85 .

4 - Engine control unit

4.1 - Engine control unit

4.2 - Checking control unit voltage supply

Special tools, workshop equipment, testers, measuring instruments and auxiliary items required

- Fault reader V.A.G 1551 or vehicle system tester V.A.G 1552 with cable V.A.G 1551/3
- Test box V.A.G 1598/31
- Hand multimeter V.A.G 1526 or multimeter V.A.G 1715
- Adapter set V.A.G 1594

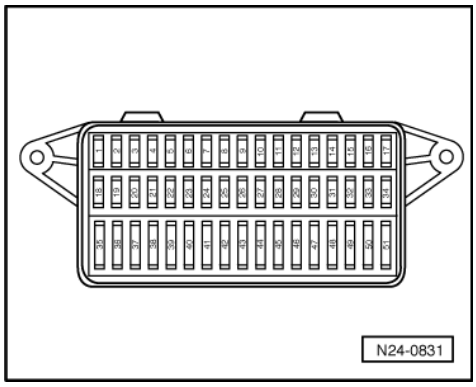

- Current flow diagram

Protected by copyright. Copying for private or commercial purposes, in part or in whole, is not permitted unless authorised by Volkswagen AG. Volkswagen AG does not guarantee or accept any liability with respect to the correctness of information in this document. Copyright by Volkswagen AG.
satelettronica

Check conditions

- The battery voltage must be at least 11.5 V.
- -> Fuses 31 and 36 must be OK.
- Alternator OK, checking:

=> Current flow diagrams, Electrical fault finding and fitting locations binder

Test sequence

- Connect fault reader V.A.G 1551 (V.A.G 1552). Start engine and select "Address word" 01 of engine control unit. When doing this the engine must be running at idling speed.
  (Connecting fault reader and selecting engine control unit => Page 4 .)

-> Indicated on display:

```
Rapid data transfer     HELP
Select function XXX
```

- Press keys 0 and 8 for the function "Read measured value block" and confirm entry with Q key.

-> Indicated on display:

```
Read measured value block
Input display group number XXX
```

- Press keys 0, 0 and 4 for "Display group number 4" and confirm entry with Q key.

-> Indicated on display:
(1...4 = Display zones)

```
Read measured value block 4
     1     2     3     4
```

- Read off figure displayed in display zone 2.
  Specification: At least 11.5 V
- Press the ⇒key.
- Press keys 0 and 6 for the "End data transfer" function and confirm input with the Q key.

- Switch off ignition.

If the specification is not attained:

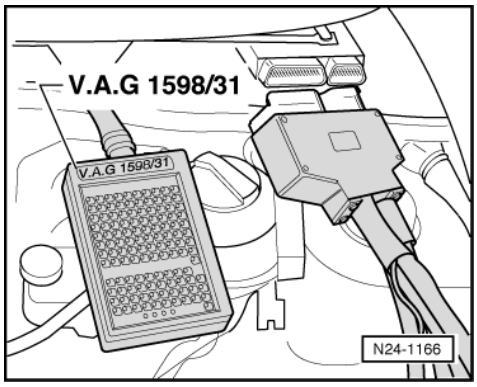

- -> Connect test box V.A.G 1598/31 to control unit wiring harness. The engine control unit remains disconnected.

Checking voltage supply terminal 30

- Measure supply voltage between test box sockets 1+3 using multimeter and adapter cables from V.A.G 1594:
  Specification: at least 11.5 V

Protected by copyright. Copyright by Volkswagen AG. Volkswagen AG does not guarantee or accept any liability with respect to the correctness of information in this document. Copyright by Volkswagen AG. Reproduced by Volkswagen AG. is not permitted unless authorised by Volkswagen AG. Volkswagen AG does not guarantee or accept any liability with respect to the correctness of information in this document. Copyright by Volkswagen AG.
satelettronica

If the specification is not attained:

- Check wiring connections to relay plate according to current flow diagram.

=> Current flow diagrams, Electrical fault finding and Fitting locations binder

Checking voltage supply terminal 15

- Measure supply voltage between test box sockets 2+4 using multimeter and adapter cables from V.A.G 1594:
  Specification: at least 11.5 V
- Switch on ignition.
  Specification: min. 11.5 V

If the specification is not attained:

- Check wiring connections to relay plate according to current flow diagram.

=> Current flow diagrams, Electrical fault finding and Fitting locations binder

4.3 - Procedure after voltage supply open circuit

All values learnt by the engine control unit and the basic setting values as well as the readiness code will be erased if the voltage supply is interrupted. Therefore, depending upon the vehicle mileage it can lead to serious engine running problems.

Special tools, workshop equipment, testers, measuring instruments and auxiliary items required

◆ Fault reader V.A.G 1551 or vehicle system tester V.A.G 1552 with cable V.A.G 1551/3

Work sequence

Perform the following operations after voltage supply open circuit:

- Switch ignition on for at least 10 seconds.
- Switch off ignition.

- Adapt the engine control unit to the throttle valve control part => Page 128
- Perform idling check
  => Page 112

Note:

During idling check the activated charcoal filter solenoid valve and the air conditioner are switched off and the Lambda regulation learning procedure is initiated.

- Perform a longer test drive until the poor driving characteristics are eliminated.

  During the road test the following operating conditions must be fulfilled:
  - The coolant temperature must exceed 80 °C .
  - When the temperature is reached, the operating conditions
    Idling
    Part throttle
    Full throttle
    Overrun
    must be attained several times.
  - At full throttle the speed must exceed 3500 rpm.

satelettronica

4.4 - Replacing engine control unit

Special tools, workshop equipment, testers, measuring instruments and auxiliary items required

- Fault reader V.A.G 1551 with cable V.A.G 1551/3

Work sequence

- First print out the control unit identification and thereby the previous control unit coding as follows:
- Connect the fault reader V.A.G 1551 (V.A.G 1552). Then switch ignition on and select engine control unit with the "Address word" 01.
  (Connecting fault reader and selecting engine control unit => Page 4 .)

-> The control unit identification and the coding appear on the display, e.g.:

```
6K090634C MARELLI 4LV     2615
Coding 00011     WSC XXXXX
```

- Print out the control unit identification by pressing the fault reader print button.
- Press the ⇒key.

- Press keys 0 and 6 for the "End data transfer" function and confirm input with the Q key.

-> Indicated on display:

```
Rapid data transfer     HELP
Select function XXX
```

- Switch off ignition.
- Remove left plenum chamber cover.
- Unlock engine control unit connector and pull it off.

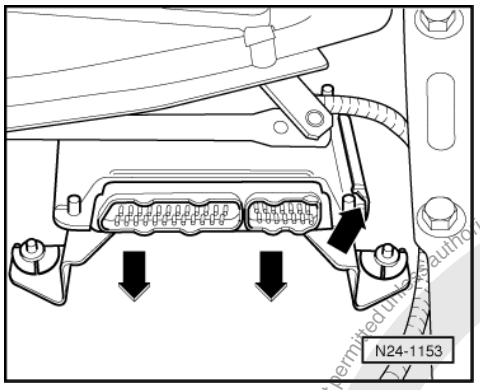

- -> Carefully lever off securing clip, using a screwdriver -right arrow-.
- Pull control unit forwards out of retaining frame -arrows-.

Installing

- Slide the new control unit into the retaining frame.
- Engage the retaining clip.
- Install control unit connector and lock.
- Match new control unit to throttle valve control part => Page 128

Engine code: APE

- Match new control unit to the electronic immobilizer => Page 130

satelettronica
Protected by copyright. Copying for private or commercial purposes, in whole or in part, is not permitted unless authorised by Volkswagen AG. Volkswagen AG does not guarantee or accept any liability with respect to the correctness of information in this document. Copyright by Volkswagen AG.

Engine code: AUA

=> Electrical system; Repair group 01; Immobilizer self-diagnosis; Adaption following renewal of engine control unit Immobilizer self-diagnosis Adaption following renewal of engine control unit

- Then subsequently interrogate the fault memory of the new engine control unit and erase the fault memory if necessary.
- Perform idling check
  => Page 112

4.5 - Coding engine control unit

Notes:

- A 5-character code must always be displayed during the control unit identification.
- The control unit must be recoded if the vehicle relevant coding is not displayed or the control unit has been renewed.

Special tools, workshop equipment, testers, measuring instruments and auxiliary items required

- Fault reader V.A.G 1551 with cable V.A.G 1551/3

Work sequence

- Connect the fault reader V.A.G 1551 (V.A.G 1552). Then switch ignition on and select engine control unit with the "Address word" 01.
  (Connecting fault reader and selecting engine control unit => Page 4 .)

-> Indicated on display:

```
Rapid data transfer      HELP
Select function XXX
```

- Press keys 0 and 7 for the function "Code control unit" and confirm entry with Q key.

-> Indicated on display:

```
Coding control unit      Q
Enter code number XXXXX      (0-32000)
```

- Enter the relevant code number for this vehicle and confirm with Q key.

  Coding variants => Page 128 .

-> The control unit identification and the coding appear on the display, e.g.:

```
6K090634C MARELLI 4LV      2615
Coding 00011      WSC XXXXX
```

-> Indicated on display when a non-authorised code number has been entered.

```
Function is not recognised or cannot
□
be performed at the moment.
```

- Press the ⇒key.

- Press keys 0 and 6 for the "End output" function and confirm input with the Q key.
- Switch off ignition.

Protected by copyright. Copying for private or commercial purposes, in part or in whole, is not permitted unless authorised by Volkswagen AG. Volkswagen AG does not guarantee or accept any liability with respect to the correctness of information in this document.
satelettronica

Note:

The code unit entered and shown on the display will not be used by the engine control unit until the ignition has been switched off once.

An incorrect coding leads to:

- Engine running faults (gear change jerks, load change jerks, etc.)
- Increased fuel consumption
- Increased exhaust gas emissions
- Faults stored in fault memory which are not actually present
- Functions will not be performed (Lambda regulation, activation of the activated charcoal filter system, etc.).
- On front wheel drive vehicles the traction control will not function (TC warning lamp comes on)
- Reduced gearbox life

4.6 - Coding variants of engine control unit

For vehicles with front wheel drive, the engine control unit is coded as follows:

Code number	Vehicles with
00001	Manual gearbox
00011	Manual gearbox with ABS
00021	Manual gearbox with airbag
00031	Manual gearbox with ABS and airbag
00003	Automatic gearbox
00013	Automatic gearbox with ABS
00023	Automatic gearbox with airbag
00033	Automatic gearbox with ABS and airbag

4.7 - Adapting engine control unit to throttle valve control part

The adaption teaches the engine control unit the various positions of the throttle unit when the ignition is switched on and the engine is not running. These positions are stored in the control unit. The feedback of the throttle valve position is via both angle senders for throttle valve drive.

Adapting sequence must be performed if:

- The voltage supply is interrupted
- The throttle valve control unit is removed and installed
- The throttle valve control unit is renewed
- If when installing another engine another throttle valve control unit is installed

Special tools, workshop equipment, testers, measuring instruments and auxiliary items required

- Fault reader V.A.G 1551 or vehicle system tester V.A.G 1552 with cable V.A.G 1551/3

Test conditions

- No faults must be stored in fault memory
  => Page 7 , interrogating fault memory
- The battery voltage must be at least 11.5 V.
- The throttle valve must be at idling speed position.
- Coolant temperature must be 5...95 °C =>display group 04, display zone 3.
- The cruise control system must be functioning correctly if installed.

Protected by copyright. Copying for private or commercial purposes, in part or whole, is not permitted unless authorised by Volkswagen AG. Volkswagen AG does not guarantee or accept any liability with respect to the correctness of information in this document. Copyright by Volkswagen AG.
satelettronica

Work sequence

- Connect the fault reader V.A.G 1551 (V.A.G 1552). Then switch ignition on and select engine control unit with the "Address word" 01.
  (Connecting fault reader and selecting engine control unit => Page 4 .)

-> Indicated on display:

```
Rapid data transfer      HELP
Select function XXX
```

- Press keys 0 and 4 for the function "Introduction of basic setting" and confirm entry with Q key.

-> Indicated on display:

```
Basic setting
Input display group number XXX
```

- Press keys 0, 6 and 0 for the "Display group number 60" and confirm entry with Q key.

-> Indicated on display:
(1...4 = display zones)

```
Basic setting      60
     xxx %      xxx %      x      ADP. runs
```

After pressing the Q key the throttle valve positioner is switched so that it is not supplied with voltage at start of test.

In this condition the throttle valve is pulled into an emergency running position by a mechanical spring in the throttle valve control part. The values that both angle senders provide in the emergency running position are stored by the engine control unit.

Thereafter the throttle valve is opened a predetermined value. If this value is achieved, the throttle valve is again switched so that it is not supplied with voltage. Now the mechanical spring must pull the throttle valve to the previously learnt emergency running position within a predetermined period (spring test).

Then the throttle valve is closed by the throttle valve positioner and the values, which are supplied by the angle senders in the throttle valve control part are stored by the engine control unit.

If the engine control unit switches the throttle valve positioner so that it is without voltage during normal operation, this is indicated by the increased and hunting idling speed. The engine reacts slowly to accelerator changes.

-> Indicated on display:
(1...4 = display zones)

```
Basic setting      60
     xxx %      xxx %      9      ADP. OK.
```

Adapting has been performed successfully.

To store the values:

- Switch off ignition.

Note:

If the basic setting of the control unit is interrupted, the cause could be one of the following:

- Battery voltage too low.
- Throttle valve control unit or wiring is defective. Check => Page 85 .

After an interruption a fault is stored in fault memory. When next switching on ignition the basic setting is automatically performed again.

- End the engine basic setting by pressing the⇨ key.

Copyright © Volkswagen AG. Protected by copyright. Copying for private or commercial purposes, in part or in whole, is not permitted unless authorised by Volkswagen AG. Volkswagen AG does not guarantee or accept any liability with respect to the correctness of information in this document.
satelettronica

- Press keys 0 and 6 for the function "End output" and confirm entry with the Q key.

4.8 - Adapting engine control unit to electronic immobilizer

Engine code: AUA

=> Electrical system; Repair group 01; Immobilizer self-diagnosis; Adaption following renewal of engine control unit Immobilizer self-diagnosis Adaption following renewal of engine control unit

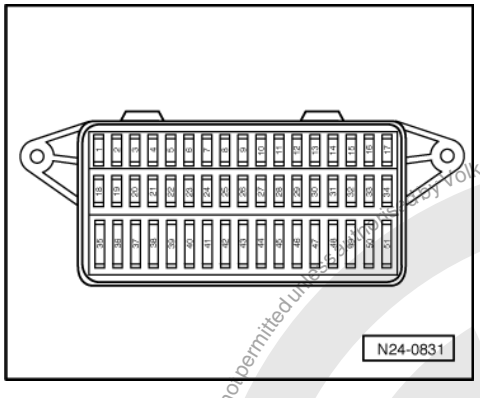

Engine code: APE

Special tools, workshop equipment, testers, measuring instruments and auxiliary items required

- Fault reader V.A.G 1551 or vehicle system tester V.A.G 1552 with cable V.A.G 1551/3A

Conditions

- -> Fuses No. 28, 29, 32 and 37 must be OK.
- Authorized vehicle key required.

Work sequence

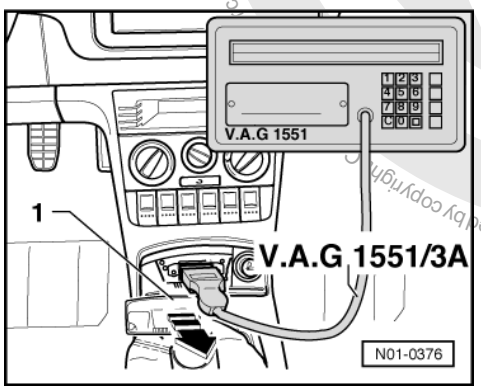

- -> Pull cover -1- off in direction of arrow.
- Connect fault reader V.A.G 1551 or vehicle system tester V.A.G 1552 with cable V.A.G 1551/3A.
- Switch on ignition.
- Operate fault reader or vehicle system tester taking into account the information on the display:
- Press key 1 for "Rapid data transfer".
- Press keys 2 and 5 for address word "Immobilizer" and confirm entry with Q key.

-> Indicated on display:

```
6H0953257 IMMO VWZ3Z0V6474044 V64
Coding 09600     WSC XXXXX
```

Protected by copyright. Copyright by Volkswagen AG. Volkswagen AG does not guarantee or accept any liability with respect to the correctness of information in this document. Copyright by Volkswagen AG. Commercial use or distribution is not permitted unless authorized by Volkswagen AG.
satelettronica

- Press the ⇒key.

-> Indicated on display:

```
Rapid data transfer      HELP
Select function XXX
```

- Press keys 1 and 0 for function "Adaption" and confirm entry with Q key.

-> Indicated on display:

```
Adaption
Feed in channel number XX
```

- Press key 0 twice for "Channel number 0" and confirm entry with Q key.

-> Indicated on display:

```
Adaption     Q
Erase learnt values?
```

- Confirm input with Q key.

-> Indicated on display:

```
Adaption
Learnt values have been erased
```

- Conclude adaption by pressing ⇒ key.
- Press keys 0 and 6 for the function "End output" and confirm entry with the Q key.

-> Indicated on display:

```
Rapid data transfer      HELP
Enter address word XX
```

- Switch off ignition.

Note:

The identity of the engine control unit is read into the immobilizer control unit when next switching the ignition on.

5 - Checking additional signals

5.1 - Checking additional signals

5.2 - Checking speed signal

Special tools, workshop equipment, testers, measuring instruments and auxiliary items required

- Fault reader V.A.G 1551 or vehicle system tester V.A.G 1552 with cable V.A.G 1551/3
- Test box V.A.G 1598/31
- Hand multimeter V.A.G 1526 or multimeter V.A.G 1715
- Adapter set V.A.G 1594
- Current flow diagram

Check conditions

- The battery voltage must be at least 11.5 V.

Protected by copyright. Copyright Volkswagen AG. Volkswagen AG does not guarantee or accept any liability with respect to the correctness of information in this document. Copying for private or commercial purposes, in part or whole, is not permitted unless authorised by Volkswagen AG.
satelettronica

- Speedometer must be OK., checking speedometer:

=> Electrical system; Repair group 90

Test sequence

Note:

To check the speed signal the vehicle must be driven. To do this a second person is necessary.

Warning! Secure fault reader to rear seat and operate from this position.

- Connect fault reader V.A.G 1551 (V.A.G 1552). Start engine and select "Address word" 01 of engine control unit. When doing this the engine must be running at idling speed.
  (Connecting fault reader and selecting engine control unit => Page 4 .)

-> Indicated on display:

```
Rapid data transfer      HELP
Select function XXX
```

- Press keys 0 and 8 for the function "Read measured value block" and confirm entry with Q key.

-> Indicated on display:

```
Read measured value block
Input display group number XXX
```

- Press keys 0, 0 and 5 for "Display group number 5" and confirm entry with Q key.

-> Indicated on display:
(1...4 = Display zones)

```
Read measured value block 5
     1     2     3     4
```

- Carry out test drive with a 2nd person to observe display.
- Observe figure displayed in display zone 3:
  Specification: approx. driven speed
- Press the ⇒key.
- Press keys 0 and 6 for the "End output" function and confirm input with the Q key.
- Switch off ignition.

If no speed is displayed:

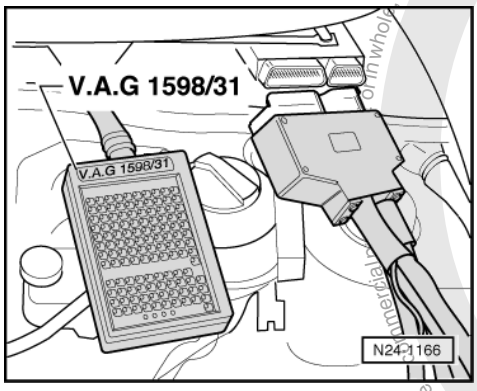

- -> Connect test box V.A.G 1598/31 to control unit wiring harness. The engine control unit remains disconnected.
- Connect multimeter to measure voltage between test box sockets 4 (terminal 15) + 54 (speed signal).
- Switch on ignition.

Protected by copyright. Copyright by Volkswagen AG.
Copyright by Volkswagen AG. Volkswagen AG does not guarantee or accept any liability with respect to the correctness of information in this document.
Duplicate of this document or in whole is not permitted unless authorised by Volkswagen AG.
satelettronica

- Lift vehicle at front left.

- Rotate front wheel and observe voltage display.
  Specification: between 0 and at least 4 Volt fluctuating

If the display does not fluctuate:

- Check wiring to speedometer/speedometer sender.

=> Current flow diagrams, Electrical fault finding and Fitting locations binder

5.3 - Checking signal from/to air conditioning system

Special tools, workshop equipment, testers, measuring instruments and auxiliary items required

- Fault reader V.A.G 1551 or vehicle system tester V.A.G 1552 with cable V.A.G 1551/3
- Test box V.A.G 1598/31
- Hand multimeter V.A.G 1526 or multimeter V.A.G 1715
- Adapter set V.A.G 1594
- Current flow diagram

Test conditions

- Air conditioner functioning OK.
- Air conditioner must be switched off
- No faults must be stored in fault memory
  => Page 7 , interrogating fault memory
- Vehicle at room temperature (warmer than + 15 °C).

Test sequence

- Connect fault reader V.A.G 1551 (V.A.G 1552). Start engine and select "Address word" 01 of engine control unit. When doing this the engine must be running at idling speed.
  (Connecting fault reader and selecting engine control unit => Page 4 .)

-> Indicated on display:

```
Rapid data transfer      HELP
Select function XXX
```

- Press keys 0 and 8 for the function "Read measured value block" and confirm entry with Q key.

-> Indicated on display:

```
Read measured value block
Input display group number XXX
```

- Press keys 0, 5 and 0 for "Display group number 50" and confirm entry with Q key.

-> Indicated on display:
(1...4 = Display zones)

```
Read measured value block 50
     1     2     3     4
```

- Observe display in display zone 4. It must show
  Compr. OFF.
- Switch on air conditioning system.
- Select lowest temperature and highest blower speed.

  The display in display zone 4 must change to

Protected by copyright. Copyright by Volkswagen AG. Volkswagen AG does not guarantee or accept any liability with respect to the correctness of information in this document. Copyright by Volkswagen AG. Copying for private or commercial purposes, in part or in whole, not permitted unless authorised by Volkswagen AG.
satelettronica

Compr. ON.

- Press the ⇒key.
- Press keys 0 and 6 for the "End output" function and confirm input with the Q key.
- Switch off ignition.

If the display does not change:

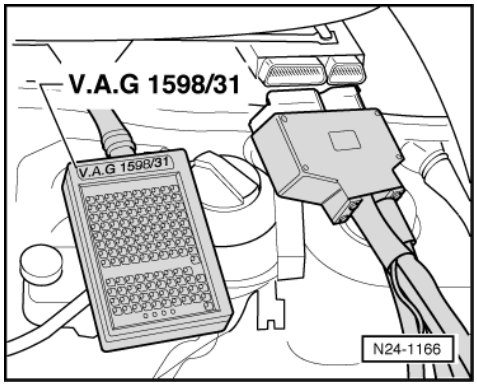

- -> Connect test box V.A.G 1598/31 to control unit wiring harness. The engine control unit remains disconnected.
- Check wiring for open circuit between test box sockets 40 + 41 and air conditioner system using current flow diagram.
  Wire resistance: max. 1.5 ω

5.4 - Checking signal from brake light switch and brake pedal switch

Special tools, workshop equipment, testers, measuring instruments and auxiliary items required

- Test box V.A.G 1598/31
- Hand multimeter V.A.G 1526 or multimeter V.A.G 1715
- Adapter set V.A.G 1594
- Current flow diagram

Check conditions

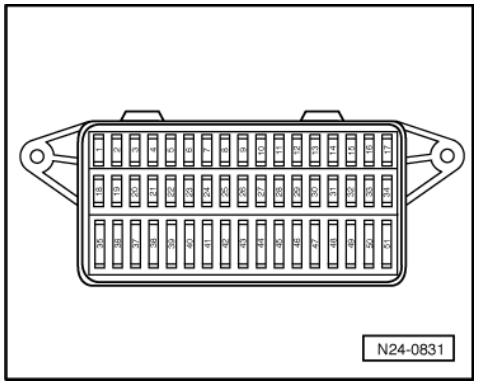

- -> Fuses No. 15 and 24 must be OK.
- The battery voltage must be at least 11.5 V.

Test sequence

Note:

The brake pedal switch (F47) and brake light switch (F) are two separate components.

Protected by copyright. Copying for private or commercial purposes, part or in whole, is not permitted unless authorised by Volkswagen AG. Volkswagen AG does not guarantee or accept any liability with respect to the correctness of information in this document. Copyright by Volkswagen AG.
satelettronica

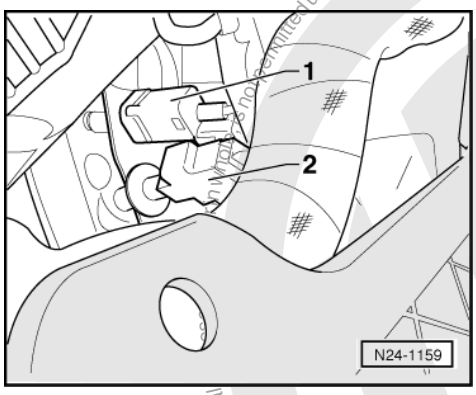

- -> Pull the connector off brake light switch (item 2) and brake pedal switch (item 1).
- Connect the multimeter to measure resistance between contacts 1 and 2 of brake light switch (item 2).
  Specification: ∞ ω (no continuity)
- Depress brake pedal.
  Specification: approx. 0 ω
- Connect the multimeter to measure resistance between contacts 1 and 2 of brake pedal switch (item 1).
  Specification: approx. 0 ω
- Depress the brake pedal.
  Specification: ∞ ω (no continuity)

If the specifications are not attained:

- Replace the brake light switch or brake pedal switch.

If the specifications are obtained:

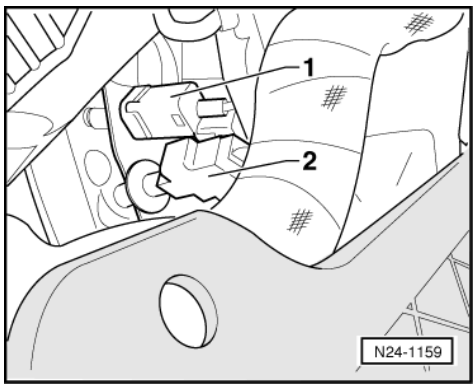

- -> Connect multimeter to measure voltage between contact 1 of brake light switch -2- and earth.
  Specification: at least 11.5 V
- Switch ignition on.
- Connect multimeter to measure voltage between contact 1 of brake pedal switch -1- and earth.
  Specification: at least 11.5 V

If the specifications are not obtained:

- Check wiring between connector contact 1 and fuse box using current flow diagram.

=> Current flow diagrams, Electrical fault finding and Fitting locations binder

If the specification is obtained:

Protected by copyright. Copyright by Volkswagen AG.
Volkswagen AG does not guarantee or accept any liability with respect to the correctness of information in this document.
Duplication not permitted unless authorised by Volkswagen AG.
satelettronica

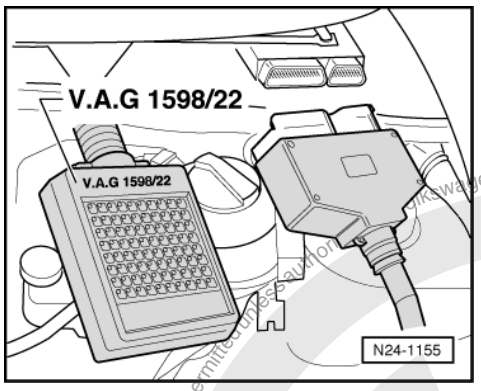

- Remove left plenum chamber cover.
- -> Connect test box V.A.G 1598/31 to control unit wiring harness.
- Check wiring for open circuit between test box and connectors using current flow diagram.
  Contact 2+socket 51 brake pedal switch
  Contact 2+socket 23 brake light switch
  Wire resistance: Max. 1.5 ω
- Additionally check wires for short to one another.
- Additionally check the wiring for short to battery positive or earth.

5.5 - Checking driving range signal

Vehicles with automatic gearbox only

Engine control unit receives following information from gearbox control unit:
Driving range selected (selector lever in 2/3/4/R/D)
or
No driving range selected (selector lever in P or N)

Special tools, workshop equipment, testers, measuring instruments and auxiliary items required

- Fault reader V.A.G 1551 or vehicle system tester V.A.G 1552 with cable V.A.G 1551/3
- Test box V.A.G 1598/31
- Hand multimeter V.A.G 1526 or multimeter V.A.G 1715
- Adapter set V.A.G 1594
- Current flow diagram

Test conditions

- The selector lever of the automatic gearbox must be in "P" or "N" position.

Test sequence

- Connect the fault reader V.A.G 1551 (V.A.G 1552). Then switch ignition on and select engine control unit with the "Address word" 01.
  (Connecting fault reader and selecting engine control unit => Page 4 .)

-> Indicated on display:

```
Rapid data transfer      HELP
Select function XXX
```

- Press keys 0 and 8 for the function "Read measured value block" and confirm entry with Q key.

-> Indicated on display:

```
Read measured value block
Input display group number XXX
```

- Press keys 0, 5 and 6 for "Display group number 56" and confirm entry with Q key.

Volkswagen AG. Volkswagen AG does not guarantee or accept any liability with respect to the correctness of information in this document. Copyright by Volkswagen AG.
Please supply copyright owner for permission or commercial purposes, including reproduction in other media.
satelettronica

-> Indicated on display:
(1...4 = Display zones)

```
Read measured value block 56
     1     2     3     4
```

- Observe display zone 4. The display must read
  Specification: x 0 x "Neutral".
- Depress foot brake and engage gear. The display must jump to
  Specification: x 1 x "Gear engag".

- Press the ⇒key.
- Press keys 0 and 6 for the "End output" function and confirm input with the Q key.
- Switch off ignition.

If the display does not change:

- Checking data bus => Page 138

5.6 - Checking rpm signal

Note:

The engine speed signal is output on contact 37 of engine control unit. The signal is necessary amongst other things for the automatic gearbox control unit to calculate the shift points and for the rev counter in dash panel insert.

Special tools, workshop equipment, testers, measuring instruments and auxiliary items required

- Test box V.A.G 1598/31
- Adapter set V.A.G 1594
- Hand multimeter V.A.G 1526 or multimeter V.A.G 1715
- Current flow diagram

Test conditions

- No faults must be stored in fault memory => Page 7 , interrogating and erasing fault memory.

Test sequence

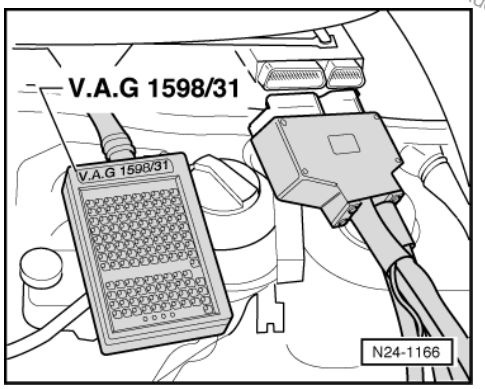

- Remove left plenum chamber cover.
- -> Connect test box V.A.G 1598/31 to control unit wiring harness. The engine control unit remains disconnected.
- Check the wiring from test box contact 6 to dash panel insert for open circuit using current flow diagram:

=> Current flow diagrams, Electrical fault finding and Fitting locations

Protected by copyright. Copying for private or commercial purposes, in part or in whole, is not permitted unless authorised by Volkswagen AG. Volkswagen AG does not guarantee or accept any liability with respect to the correctness of information in this document. Copyright by Volkswagen AG.
satelettronica

5.7 - Checking data bus

Function

The engine control unit communicates with the ABS/ESP control unit, combi instrument, steering angle sender and the gearbox control unit via a CAN data bus.

Data bus-compatible control units are connected together via two data bus wires twisted together (CAN high and CAN low) and exchange information (messages). Information not available in the data bus will be recognised as a fault by the engine control unit as well as other CAN data bus control units.

The CAN data bus requires a matching resistor of 66ω to function fault free. This matching resistor is located in the engine control unit.

Further information:

=> Self study programme No. 186 "The CAN data bus".

Test conditions

- A fault has been recognised by the CAN data bus self-diagnosis.

Special tools, workshop equipment, testers, measuring instruments and auxiliary items required

- Test box V.A.G 1598/31
- Hand multimeter V.A.G 1526 or multimeter V.A.G 1715
- Adapter set V.A.G 1594
- Current flow diagram

Test sequence

- Switch off ignition.
- Unlock the engine control unit connector and pull it off.
- Connect test box V.A.G 1598/31 to engine control unit. The control unit wiring harness is not connected by this action.
- Check centralized matching resistor in engine control unit.

- To do this, measure resistance between the test box and
  Sockets 58 + 60.
  Specification: 60 ...72 ω

If the resistance measurement is outside the specified range:

- Renew engine control unit => Page 126 .

If the resistance value is within the specified range:

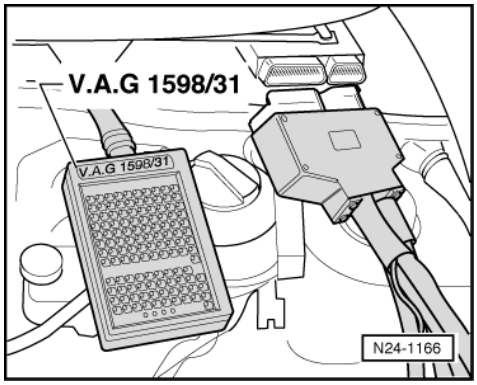

- Pull test box V.A.G 1598/31 off engine control unit.
- -> Connect test box V.A.G 1598/31 to control unit wiring harness.
- Check the CAN data bus wiring for short to one another:
- To do this perform a resistance measurement between the test box sockets 58 + 60:

Protected by copyright. Copyright by Volkswagen AG. Volkswagen AG does not guarantee or accept any liability with respect to the correctness of information in this document. Copyright by Volkswagen AG. Reproduction is not permitted unless authorised by Volkswagen AG. Volkswagen AG does not guarantee or accept any liability with respect to the correctness of information in this document. Copyright by Volkswagen AG.
satelettronica

Specification: ∞ ω

If the specification is obtained (wires do not have a short to one another):

- Rectify wiring fault using current flow diagram:

=> Current flow diagrams, Electrical fault finding and Fitting locations binder

If the specification is not obtained (wires have short to one another):

- Repair the fault in the wiring using current flow diagram:

=> Current flow diagrams, Electrical fault finding and Fitting locations binder

Protected by copyright. Copying for private or commercial purposes, in part or in whole, is not permitted unless authorised by Volkswagen AG. Volkswagen AG does not guarantee or accept any liability with respect to the correctness of information in this document. Copyright by Volkswagen AG.

satelettronica

28 - Ignition system

1 - Servicing ignition system

1.1 - Servicing ignition system

1.2 - General notes on ignition system

- Only the components which specifically relate to the ignition system are dealt with here. For the other components of the injection and ignition system => Repair group 24.
- Disconnecting and connecting the battery must only be done with the ignition switched off, otherwise the engine control unit could be damaged.
- The engine control unit is equipped with self diagnosis.
- Components marked with * are checked via the self diagnosis
  => Page 7 , interrogating and erasing fault memory.
- For trouble-free operation of the electrical components a voltage of at least 11.5 V is necessary.
- Before carrying out repairs and for fault finding, interrogate fault memory => Page 7 , interrogating and erasing fault memory
- During some checks it is possible that the control unit will recognise and store a fault. Therefore after completing all checks and repairs the fault memory must be interrogated and if necessary erased.
  => Page 7 , interrogating and erasing fault memory

- If the engine starts, runs for a short period and then stops, after fault finding, repairs or component tests, then the fault may lie with the immobilizer which is blocking the engine control unit. The fault memory must be interrogated and if necessary the control unit matched => Page 130 .

Safety precautions => Page 143

Test data, spark plugs => Page 144

Protected by copyright. Copying for private or commercial purposes, in part or in whole, is not permitted unless authorised by Volkswagen AG. Volkswagen AG does not guarantee or accept any liability with respect to the correctness of information in this document. Copyright by Volkswagen AG.

satelettronica

1.3 - Removing and installing parts of the ignition system

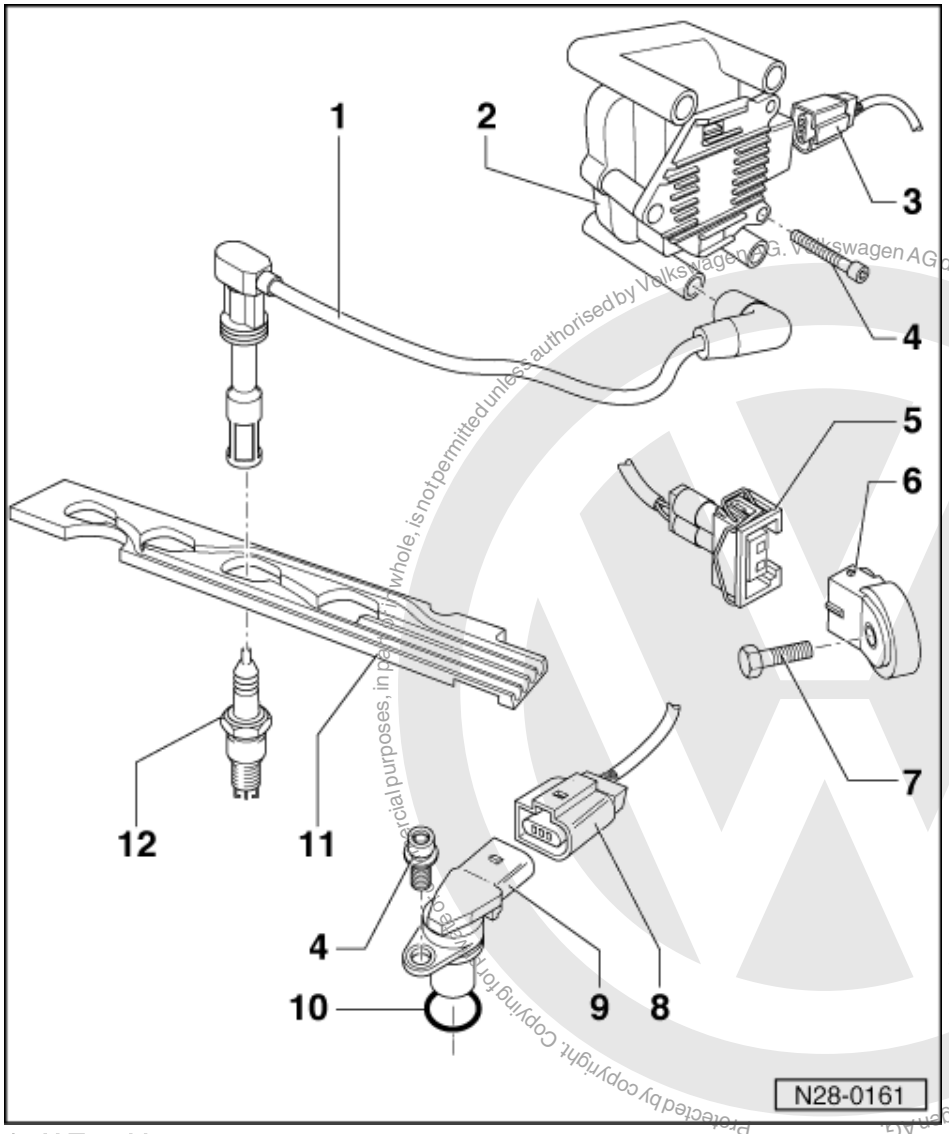

Protected by copyright. Copying for commercial purposes, in part or in whole, is not permitted unless authorised by Volkswagen AG. Volkswagen AG does not guarantee or accept any liability with respect to the correctness of information in this document. Copyright by Volkswagen AG.
satelettronica

1 H.T. cable
- With suppression connector and spark plug connector
- Resistance 4.8...7.2 kω

2 Ignition transformer (N152)
- Marked for H.T. cables:
  A = Cylinder 1
  B = Cylinder 2
  C = Cylinder 3
  D = Cylinder 4
- Checking => Page 147
- Fitting location => Page 54 , engine compartment overview

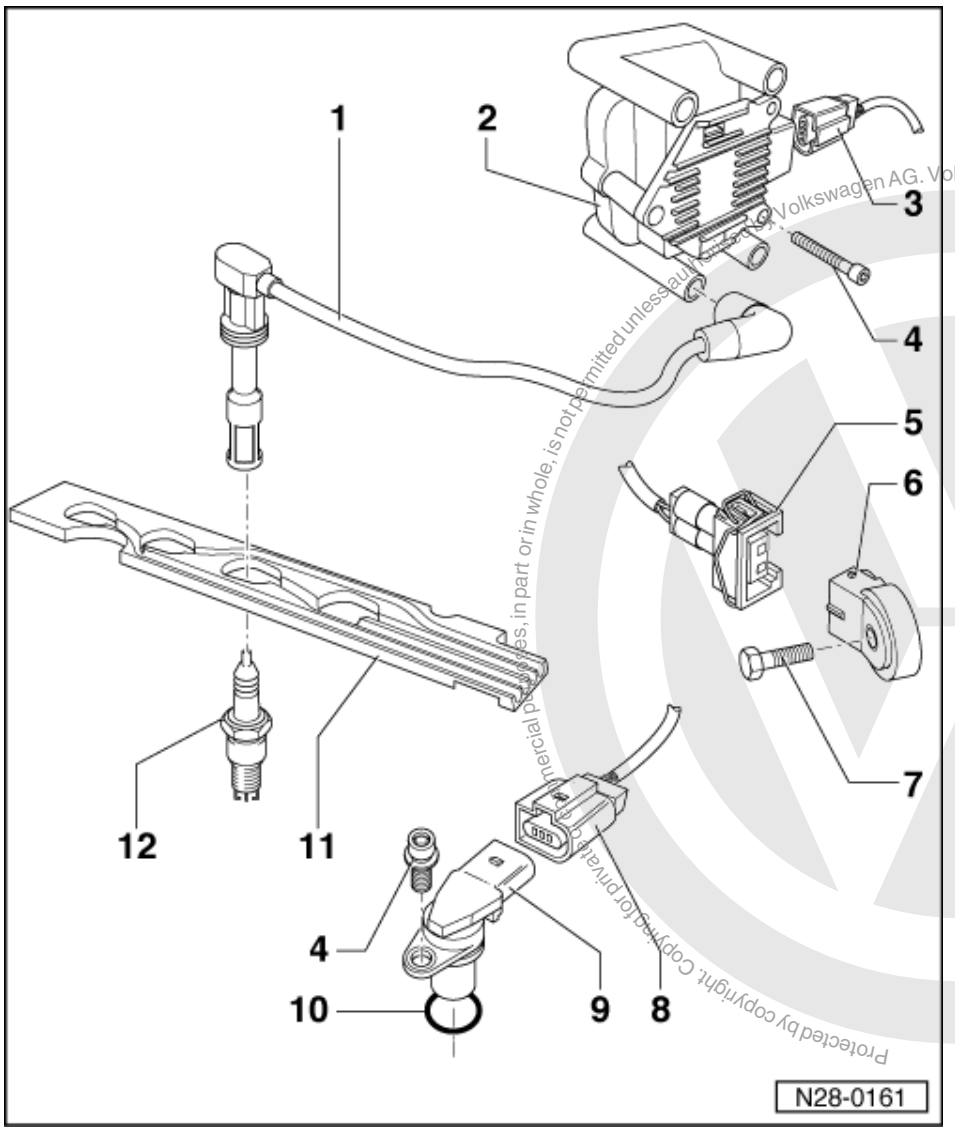

3 Connector
- Black, 4 pin
- For ignition transformer (N152)

4 10 Nm

5 Connector
- Black, 2-pin
- For knock sensor 1 (G61)
- Connector contacts are gold-plated

6 Knock sensor 1 (G61)*
- Checking => Page 150
- Fitting location => Page 54 , engine compartment overview
- Connector contacts are gold-plated

7 20 Nm
- Tightening torque influences the function of the knock sensor

Protected by copyright. Copying for private or commercial purposes, in part or in whole, is not permitted unless authorised by Volkswagen AG. Volkswagen AG does not guarantee or accept any liability with respect to the correctness of information in this document. Copyright by Volkswagen AG.
satelettronica

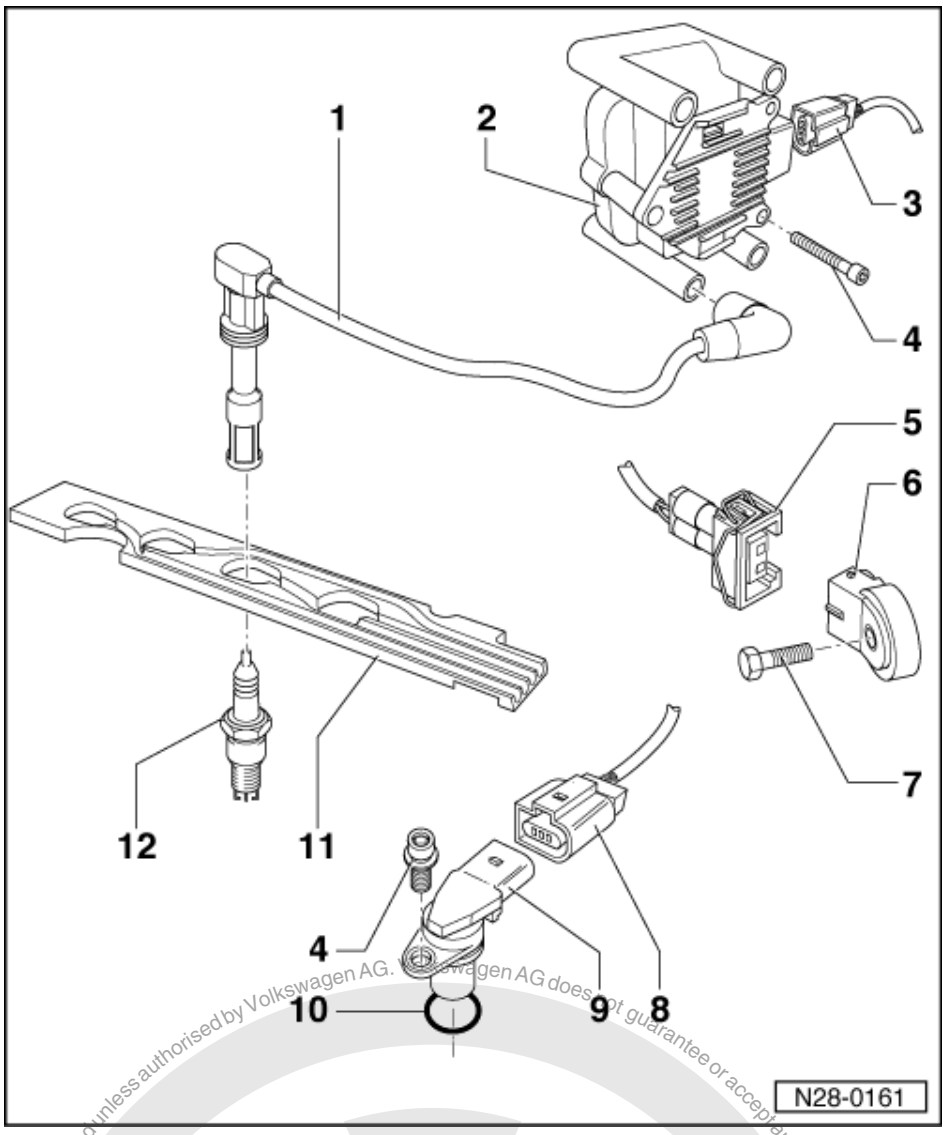

8 Connector
- Black, 3-pin
- Hall sender (G40)

9 Hall sender (G40)*
- Checking => Page 145
- Fitting location => Page 54 , engine compartment overview

10 O-ring
- Renew if damaged

11 H.T. cable guide

12 Spark plug, 30 Nm
- Remove and install with spark plug spanner 3122B
- Type and electrode gap
  => Page 144 , test data, spark plugs

1.4 - Safety precautions

To prevent injuries to persons and/or damage to the fuel injection and ignition system, the following must be noted:

Protected by copyright. Copyright by Volkswagen AG. Copyright by Volkswagen AG. Volkswagen AG does not guarantee or accept any liability with respect to the correctness of information in this document. Copyright by Volkswagen AG. Reproduction for commercial purposes, in part or in whole, is not permitted unless authorised by Volkswagen AG.
satelettronica

- Do not touch or disconnect ignition wiring when the engine is running or being turned at starter speed.
- The ignition must be switched off before connecting or disconnecting injection or ignition system wiring or tester cables.

Observe following if test and measuring instruments are required during a test drive:

- Test and measuring instruments must be secured to rear seat and operated by a 2nd person from this location.

  If test and measuring instruments are operated from front passenger's seat and the vehicle is involved in an accident, there is a possibility that the person sitting in this seat may receive serious injuries when the airbag is triggered.

- If the engine is to be turned at starter speed, without starting:

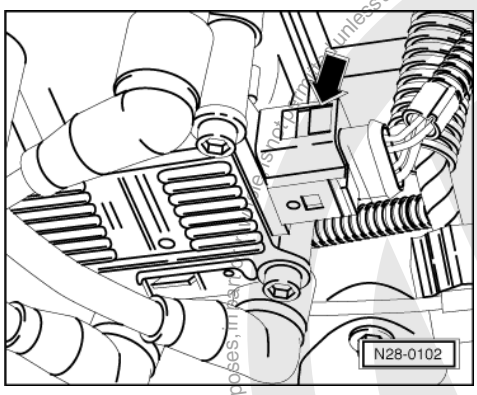

- -> Pull 4 pin connector off ignition transformer -arrow-.

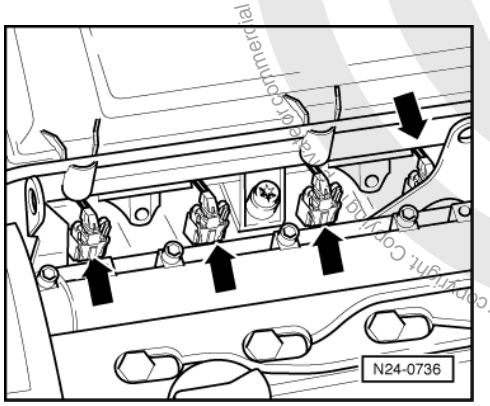

- -> Pull plug -arrows- off all injectors.

1.5 - Test data, spark plugs

Engine code	APE, AUA
Firing order	1-3-4-2
Spark plugs1) VW/Audi Manufacturer's designation	 101 000 033 AA NGK BKUR 6 ET-10
Electrode gap	0.9...1.1 mm

Protected by copyright. Copyright by Volkswagen AG.
Copyright by Volkswagen AG. Volkswagen AG does not guarantee or accept any liability with respect to the correctness of information in this document. Copyright by Volkswagen AG. Reproduction, distribution or storage in electronic media for commercial purposes, in whole or in part, is not permitted unless authorised by Volkswagen AG.
satelettronica

Engine code	APE, AUA
Tightening torque	30 Nm

1) The up-to-date figures and the spark plug change intervals:

=> Exhaust emissions test binder

1.6 - Checking Hall sender

Special tools, workshop equipment, testers, measuring instruments and auxiliary items required

- Test box V.A.G 1598/31
- Hand multimeter V.A.G 1526 or multimeter V.A.G 1715
- Adapter set V.A.G 1594
- Current flow diagram

Test conditions

- The battery voltage must be at least 11.5 V.

Test sequence

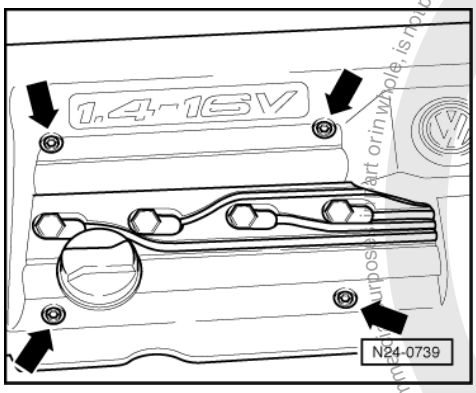

- -> Remove cover above camshaft housing -arrows-.

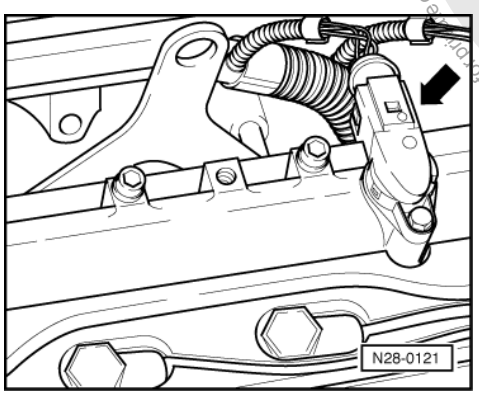

- -> Pull 3-pin connector off Hall sender -arrow-.

Protected by copyright. Copying for private or commercial purposes, in part or in whole, is not permitted unless authorised by Volkswagen AG. Volkswagen AG does not guarantee or accept any liability with respect to the correctness of information in this document. Copyright by Volkswagen AG.
satelettronica

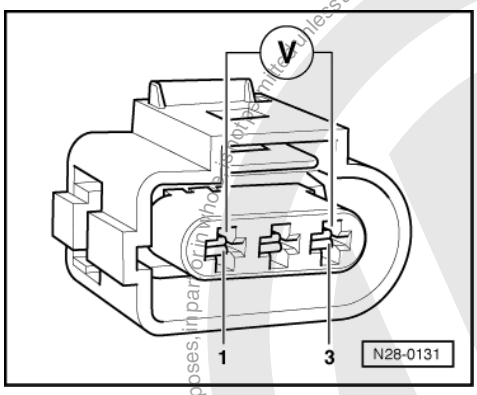

- -> Connect multimeter to measure voltage with adapter cables from V.A.G 1594 to contacts 1 (positive) and 3 (earth) on the Hall sender connector.
- Switch on ignition.
  Specification: min. 4.5 V
- Switch off ignition.

If no voltage is present:

- Remove left plenum chamber cover.

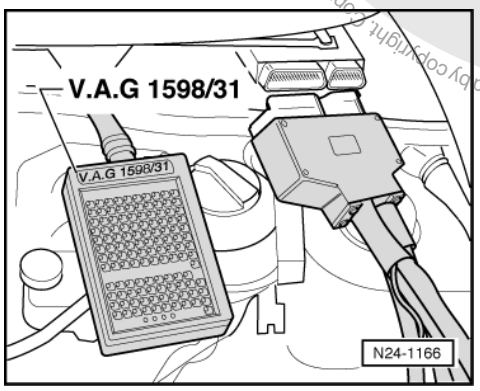

- -> Connect test box V.A.G 1598/31 to control unit wiring harness.

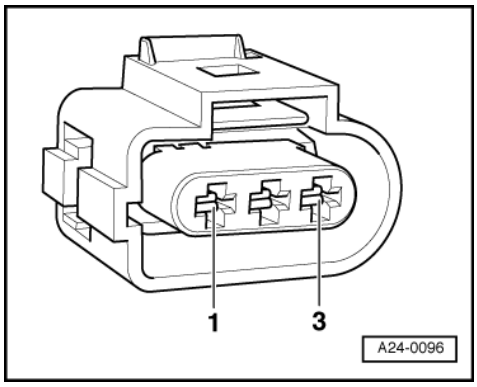

- -> Check wiring for open circuit between test box and 3-pin connector using current flow diagram.
  Contact 1+socket 98
  Contact 2+socket 86
  Contact 3+socket 108
  Wire resistance: Max. 1.5 ω
- Additionally check wires for short to one another.
  Specification: ∞ω

If no wiring fault is detected and voltage was present between contacts 1+3:

- Renew Hall sender (G40)

Protected by copyright. Copying for private or commercial purposes, in part or in whole, is not permitted unless authorised by Volkswagen AG. Volkswagen AG does not guarantee or accept any liability with respect to the correctness of information in this document. Copyright by Volkswagen AG.
satelettronica

=> Page 143 , item 9 .

If no wiring fault is detected and no voltage was present between contacts 1+3:

- Replace engine control unit
  => Page 126 .

1.7 - Checking ignition transformer

Special tools, workshop equipment, testers, measuring instruments and auxiliary items required

- Test box V.A.G 1598/31
- Hand multimeter V.A.G 1526 or multimeter V.A.G 1715
- Adapter set V.A.G 1594
- Diode test lamp V.A.G 1527
- Current flow diagram

Check conditions

- The battery voltage must be at least 11.5 V.
- Hall sender must be OK, checking
  =>Page 145 .
- Engine speed sender must be OK, checking Page 98 .

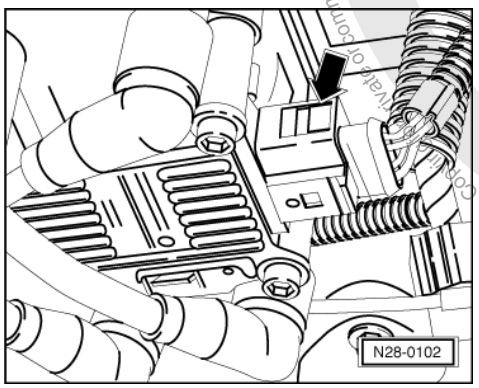

Test sequence

- -> Pull 4 pin connector off ignition transformer -arrow-.

Checking voltage supply

Test conditions

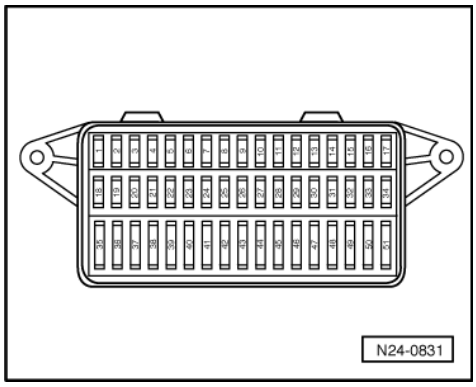

- -> Fuse No. 34 must be OK.

Protected by copyright. Copyright by Volkswagen AG. Volkswagen AG does not guarantee or accept any liability with respect to the correctness of information in this document. Copyright by Volkswagen AG. Copy and distribution of this document, in part or in whole, is not permitted unless authorised by Volkswagen AG.
satelettronica

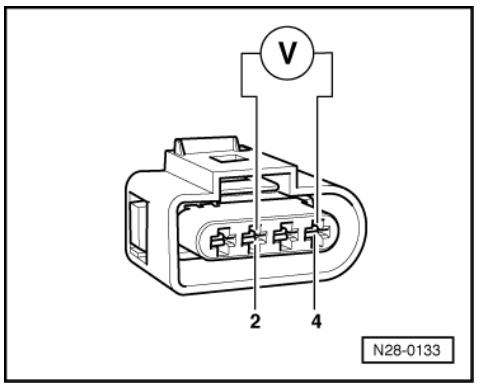

- -> Using multimeter and adapter cables from V.A.G 1594 measure the supply voltage between contacts 2 +4 of disconnected connector.
- Switch on ignition.
  Specification: min. 11.5 V
- Switch off ignition.

If no voltage is present:

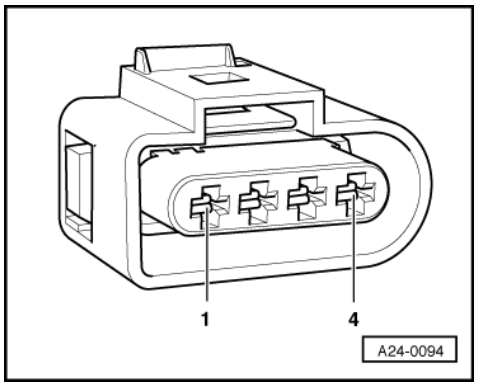

- -> Check wire between 4 pin connector contact 2 and relay plate for open circuit according to current flow diagram.
  Wire resistance: max. 1.5 ω
- Check wire between 4 pin connector contact 4 and earth for open circuit according to current flow diagram.
  Wire resistance: max. 1.5 ω

Checking activation

Warning!
During the following test do not touch the terminals of the ignition transformer or test cables.

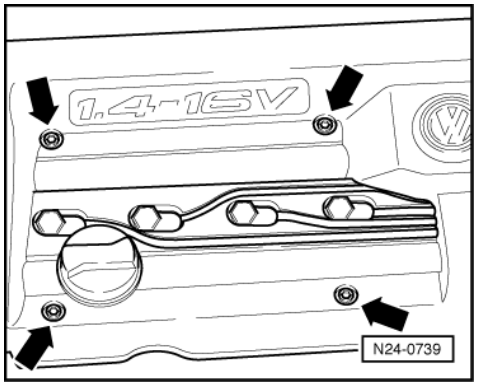

- -> Remove cover above camshaft housing -arrows-.

satelettronica
Protected by copyright. Copying for private or commercial purposes, in part or in whole, is not permitted unless authorised by Volkswagen AG. Volkswagen AG does not guarantee or accept any liability with respect to the correctness of information in this document. Copyright by Volkswagen AG.

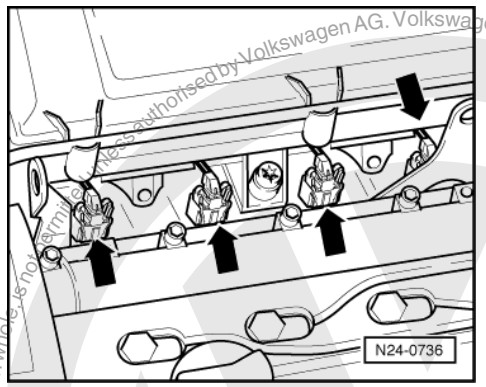

- -> Pull plug -arrows- off all injectors.

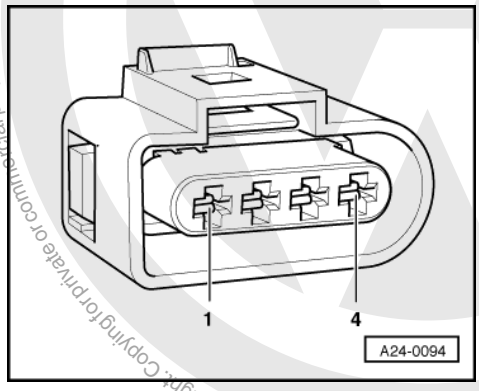

- -> Connect diode test lamp V.A.G 1527 with adapter cables from V.A.G 1594 to
  contacts 1 + 4 (ignition output 1),
  contacts 3 + 4 (ignition output 2)
  of disconnected connector.
- Operate starter and check the ignition signal from engine control unit.
  The LED must flicker
- Switch off ignition.

If the LED flickers and there is voltage between contacts 2 + 4:

- Replace ignition transformer (N152)
  => Page 141 , item 2 .

The LED does not flicker:

- Check wiring => Page 149

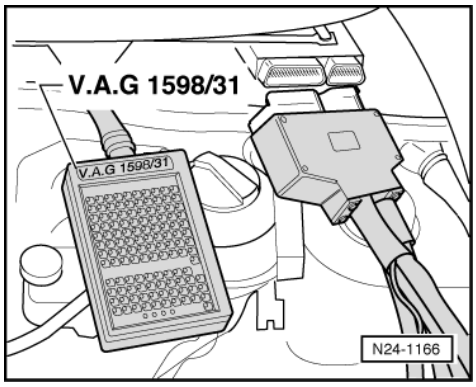

Checking wiring

- Remove left plenum chamber cover.

Copyright by Volkswagen AG. Volkswagen AG does not guarantee or accept any liability with respect to the correctness of information in this document. Copying for private or commercial purposes, in part or in whole, is not permitted unless authorised by Volkswagen AG.
satelettronica

- -> Connect test box V.A.G 1598/31 to control unit wiring harness. The engine control unit remains disconnected.

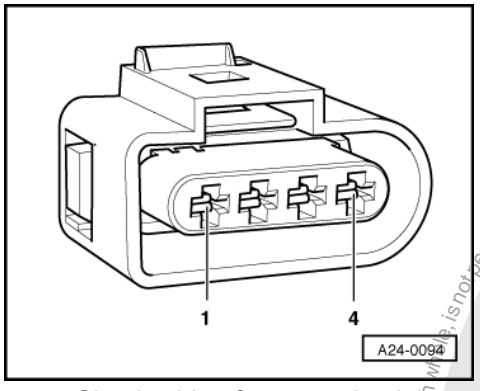

- -> Check wiring for open circuit between test box and 4-pin connector using current flow diagram.
  Contact 1+socket 102
  Contact 3+socket 103
  Wire resistance: Max. 1.5 ω
- Additionally check wires for short to one another.
  Specification: ∞ω

If no wiring fault is detected and voltage was present between contacts 2+4:

- Replace engine control unit
  => Page 126 .

Checking secondary resistance

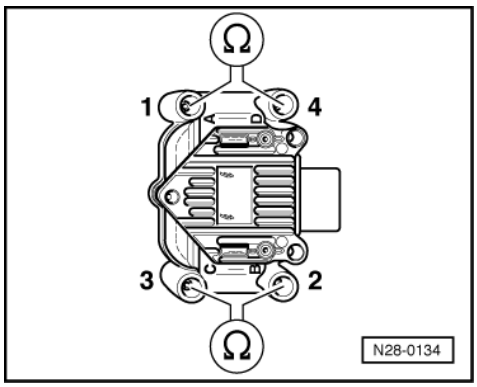

- -> Check the secondary winding on terminal 4 between
  Cyl. 1+Cyl. 4,
  Cyl. 2+Cyl. 3.
  Specification: 4.0... 6.0 kω (at 20 °C)

If the specifications are not attained:

- Replace ignition transformer (N152)
  => Page 141 , item 2 .

1.8 - Checking knock sensor

Notes:

- It is extremely important to keep to the tightening torque of 20 Nm to ensure the knock sensors perform perfectly.

Protected by copyright. Copying for private or commercial purposes, in part or in whole, is not permitted unless authorised by Volkswagen AG. Volkswagen AG does not guarantee or accept any liability with respect to the correctness of information in this document. Copyright by Volkswagen AG.
satelettronica

- Only gold-plated contacts may be used when servicing the knock sensor connector contacts.

Special tools, workshop equipment, testers, measuring instruments and auxiliary items required

- Test box V.A.G 1598/31
- Hand multimeter V.A.G 1526 or multimeter V.A.G 1715
- Adapter set V.A.G 1594
- Current flow diagram

Test conditions

- Knock sensor fault recognised by self-diagnosis =>Page 7 , interrogating and erasing fault memory.

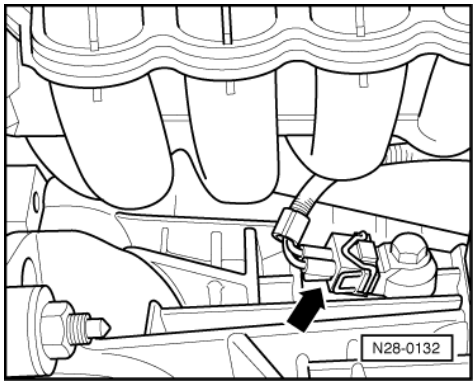

Test sequence

- -> Pull 2 pin connector off knock sensor -arrow-.

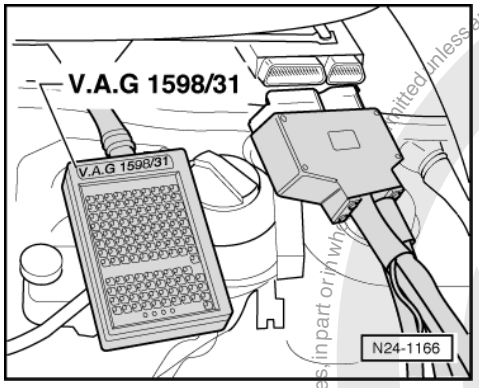

- Remove left plenum chamber cover.
- -> Connect test box V.A.G 1598/31 to control unit wiring harness. The engine control unit remains disconnected.

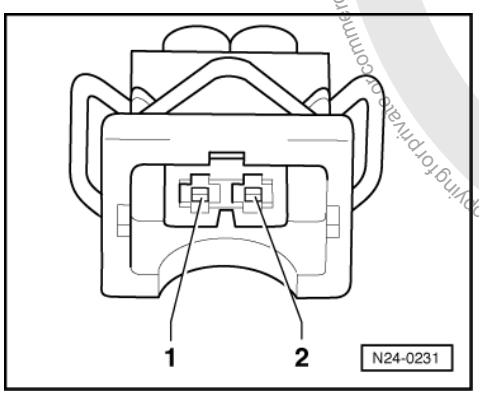

- -> Check wiring for open circuit between test box and 2-pin connector using current flow diagram.
  Contact 1+socket 106
  Contact 2+socket 99

Protected by copyright. Copying for private or commercial purposes, in part or in whole, is not permitted unless authorised by Volkswagen AG. Volkswagen AG does not guarantee or accept any liability with respect to the correctness of information in this document. Copyright by Volkswagen AG.
satelettronica

Wire resistance: Max. 1.5 ω
- Additionally check wires for short to one another.
  Specification: ∞ω

If no fault is detected in the wiring:

- Loosen knock sensor and tighten again to 20 Nm.
- Carry out test drive.

Observe the valid safety precautions when carrying out a test drive => Page 143 .

During the road test the following operating conditions must be fulfilled:
- The coolant temperature must exceed 80 °C .

- When the temperature is reached, the operating conditions
  Idling
  Part throttle
  Full throttle
  Overrun
  must be attained several times.
- At full throttle the speed must exceed 3500 rpm.

Again interrogate the control unit fault memory.

If the fault is still present:

- Replace knock sensor (G61) =>Page 142 , item 6 .

1.9 - Check misfiring recognition

Special tools, workshop equipment, testers, measuring instruments and auxiliary items required

◆ Fault reader V.A.G 1551 or vehicle system tester V.A.G 1552 with cable V.A.G 1551/3A

Test sequence

- Connect fault reader V.A.G 1551 (V.A.G 1552). Start engine and select "Address word" 01 of engine control unit. When doing this the engine must be running at idling speed.
  (Connecting fault reader and selecting engine control unit => Page 4 .)

-> Indicated on display:

```
Rapid data transfer      HELP
Select function XXX
```

- Press keys 0 and 8 for the function "Read measured value block" and confirm entry with Q key.

-> Indicated on display:

```
Read measured value block
Input display group number XXX
```

- Press keys 0, 1 and 4 for "Display group number 14" and confirm entry with Q key.

-> Indicated on display:
(1...4 = Display zones)

```
Read measured value block 14
     1     2     3     4
```

- Check the misfire recognition status in display zone 4.
  Specification: "activated"
- Check total misfires in display zone 3.
  Specification: 0

Protected by copyright. Copying for private or commercial purposes, in part or in whole, is not permitted unless authorised by Volkswagen AG. Volkswagen AG does not guarantee or accept any liability with respect to the correctness of information in this document. Copyright by Volkswagen AG.
satelettronica

If the specifications are obtained:

- Press ⇒key.
- Press keys 0 and 6 for the "End output" function and confirm input with the Q key.
- Switch off ignition.

If the specifications are not attained:

- Change to display group 15 as follows:
  V.A.G 1551: Press key 3
  V.A.G 1552: Press key ↑

-> Indicated on display:
(1...4 = Display zones)

```
Read measured value block 15
     1     2     3     4
```

- Check the misfire recognition status in display zone 4.
  Specification: "activated"
- Check misfiring of Cyl. 1...Cyl. 3 in display zones 1...3.
  Specification: 0

If the specifications are not attained:

- Press ⇒key.
- Press keys 0 and 6 for the "End output" function and confirm input with the Q key.
- Switch off ignition.
- =>Page 41 , Evaluating display group 15 and display group 16.

If the specifications are obtained:

- Change to display group 16 as follows:
  V.A.G 1551: Press key 3
  V.A.G 1552: Press key ↑

-> Indicated on display:
(1 and 4 = Display zones)

```
Read measured value block 16
     1               4
```

- Check misfire recognition status in display zone 4.
  Specification: "activated"
- Check misfiring of Cyl. 4 in display zone 1
  Specification: 0
- Press ⇒key.
- Press keys 0 and 6 for the "End output" function and confirm input with the Q key.
- Switch off ignition.

If the specification is not attained:

- =>Page 41 , Evaluating display group 15 and display group 16.

Protected by copyright. Copying for private or commercial purposes, in part or whole, is not permitted unless authorised by Volkswagen AG. Volkswagen AG does not guarantee or accept any liability with respect to the correctness of information in this document. Copyright by Volkswagen AG.
satelettronica